F I A T **D O B L Ó**

O W N E R H A N D B O O K

Dear Customer,

Thank you for choosing Fiat and congratulations on your choice of a Fiat Doblò.

We have written this handbook to help you get to know all the features of your vehicle and use it in the best possible way.

You should read it right through before taking to the road for the first time. You will find information, tips and important warnings regarding the driving of your vehicle to help you get the most from the technological features of your Fiat Doblò.

Carefully read the warnings and indications, marked with the symbols:

personal safety;

condition of the vehicle;

environmental protection.

The enclosed Warranty Booklet lists the services that Fiat offers its customers:

❒ the Warranty Certificate with terms and conditions for maintaining its validity

❒ the range of additional services available to Fiat customers.

Enjoy the read. Happy motoring!

**This Owner's Handbook describes all versions of the Fiat Doblò;
please consider only the information relevant to your version,
engine and configuration.**

READ THIS CAREFULLY!

REFUELLING

Petrol engines: only refuel with unleaded petrol with an octane rating (RON) of no less than 95 conforming to the European specification EN 228.

Diesel engines: only use diesel fuel for motor vehicles conforming to the European specification EN 590. The use of other products or mixtures may damage the engine beyond repair and consequently invalidate the warranty, depending on the damage caused.

STARTING THE ENGINE

Petrol engines: make sure that the handbrake is engaged, place the gear lever in neutral, fully depress the clutch without depressing the accelerator, then turn the ignition key to AVV and release it as soon as the engine has started.

Diesel engines: turn the ignition key to MAR and wait until the warning lights (or symbol on the display) and go off. Then, turn the ignition key to AVV and release it as soon as the engine has started.

PARKING ON FLAMMABLE MATERIAL

The catalytic silencer reaches high temperatures during operation. Do not park the on grass, dry leaves, pine needles or other flammable material as this constitutes a fire hazard.

RESPECTING THE ENVIRONMENT

The vehicle is fitted with a system that allows continuous diagnosis of the emission-related components in order to help protect the environment.

ELECTRICAL ACCESSORIES

If, after buying the vehicle, you decide to add electrical accessories (with the risk of gradually draining the battery), visit the Fiat Service Network. They can calculate the overall electrical requirement and check that the vehicle's electrical system can support the required load.

CODE card

Keep it in a safe place, not in the vehicle. You should have the electronic code from the CODE card with you at all times.

SCHEDULED MAINTENANCE

Correct maintenance is essential for ensuring the vehicle stays in tip-top condition and retains its safety features, its environmental friendliness and low running costs for a long time to come.

THE OWNER'S HANDBOOK CONTAINS...

... information, tips and important warnings on the correct use and maintenance of your vehicle over time as well as safe driving tips. Pay special attention to the symbols (personal safety) (protecting the environment) (risk of serious damage to the vehicle).

DASHBOARD

The presence and position of the controls, the instruments and the indicators may vary according to the versions.

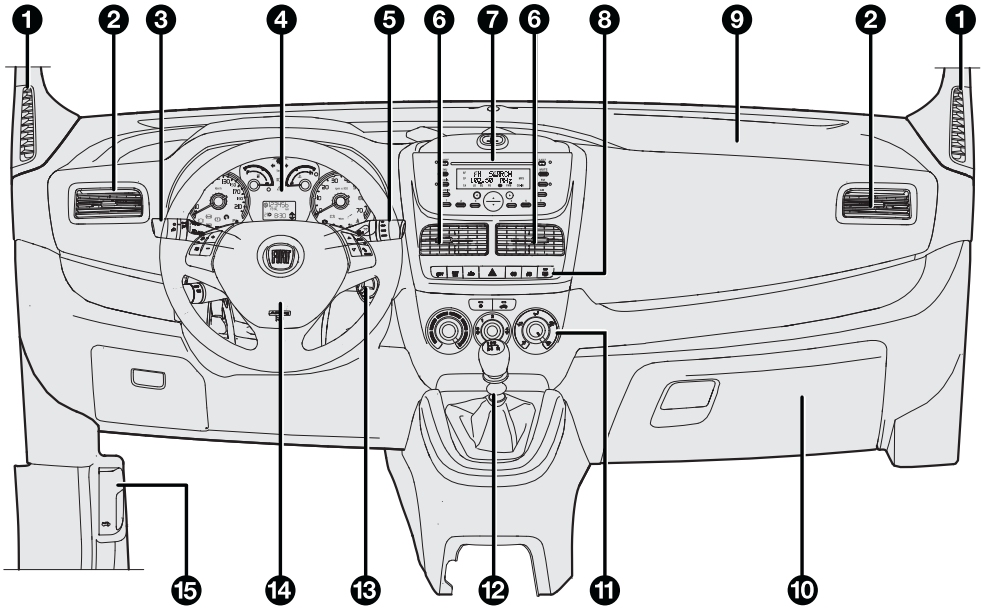

Fig. 1

F0V0185m

1. Diffuser for sending air to the side windows – 2. Adjustable and directable air diffuser – 3. Exterior lights control lever – 4. Instrument panel and warning lights – 5. Windscreen wiper/rear windscreen wiper/trip computer control lever – 6. Adjustable and directable air diffusers – 7. Sound system (for versions/markets where provided) – 8. Control Panel – 9. Passenger air bag (for versions/markets where provided) – 10. Glove compartment – 11. Heating/ventilation/climate control system controls – 12. Gear stick – 13. Starting device – 14. Driver's air bag – 15. Bonnet release lever.

KNOW YOUR VEHICLE
SAFETY
STARTING AND DRIVING
WARNING LIGHTS AND MESSAGES
IN AN EMERGENCY
SERVICING AND MAINTENANCE
TECHNICAL SPECIFICATIONS
INDEX

SYMBOLS

Special coloured labels have been attached near or on some of the components of your vehicle. These labels bear symbols that draw your attention to the precautions required when handling the component in question.

A plate summarising these symbols can be found under the engine bonnet.

THE FIAT CODE SYSTEM

This is an electrical engine immobiliser system which increases protection against attempted theft of the vehicle.

It is automatically activated when the ignition key is extracted.

Each key contains an electronic device which modulates the signal emitted during starting by an antenna built into the starting device. This signal is the 'password' which changes at each starting and which the control unit uses to recognise the key and enable starting.

OPERATION

Each time the vehicle is started by turning the ignition key to MAR, the Fiat CODE system control unit sends a recognition code to the engine management control unit to deactivate the immobiliser.

The code is only sent if the Fiat CODE system control unit has recognised the code transmitted by the key.

Each time the ignition key is turned to STOP, the Fiat CODE system deactivates the functions of the engine management control unit.

If, during starting, the code is not correctly recognised, warning light lights up in the instrument panel.

In this case, turn the key to STOP and then to MAR; if it is still locked, try again with the other keys that come with the vehicle. Contact a Fiat Service Network if you still cannot start the engine.

Warning light comes on when driving

❒ If the warning light comes on, this means that the system is running a self-diagnosis (owing to a voltage drop, for example).

❒ If the warning light stays on, contact the Fiat Service Network.

The electronic components inside the key may be damaged if the key is subjected to sharp knocks.

THE KEYS

CODE CARD fig. 2
(for versions/markets where provided)

The vehicle is delivered with duplicate ignition keys and with the CODE card, which bears the following:

A the electronic code;

B the mechanical key code to be given to the Fiat Service Network when ordering duplicate keys.

WARNING In order to ensure complete efficiency of the electronic devices inside the keys, they should never be exposed to direct sunlight.

All the keys and the CODE card must be handed over to the new owner when selling the vehicle.

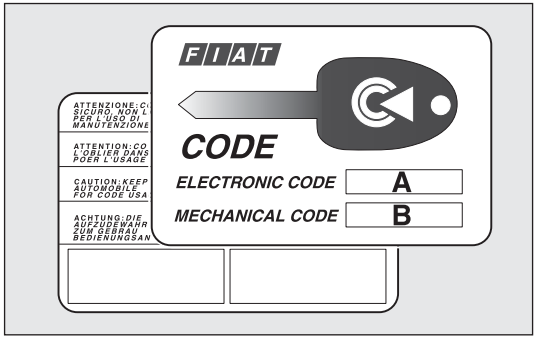

F0V0104m

fig. 2

MECHANICAL KEY fig. 3

The metal insert A operates:

❒ the starting device;

❒ the door locks;

❒ opening and closing the fuel plug.

KEY WITH REMOTE CONTROL fig. 4

(for versions/markets where provided)

The metal insert A operates:

❒ the starting device;

❒ the door locks;

❒ opening and closing the fuel tank plug.

To extract the metal insert, press button B.

To re-house it, proceed as follows:

❒ hold down button B and move the metal insert A;

❒ release button B and turn the metal insert A until you hear the proper locking click.

WARNING

Only press button B with the key away from your body, specifically from your eyes and from objects which could get damaged (e.g. your clothes). Do not leave the key unattended to avoid the button being accidentally pressed while it is being handled, e.g. by a child.

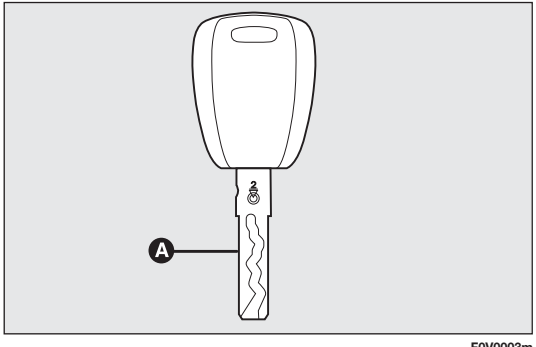

F0V0003m

fig. 3

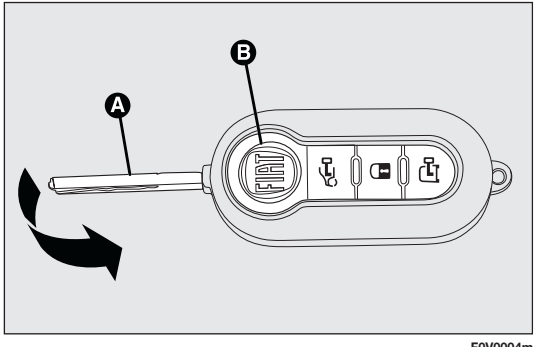

F0V0004m

fig. 4

Button unlocks all the doors (including the tailgate, the rear swing doors and the sliding side doors for versions/markets where provided).

Button locks all the doors;

Button unlocks the boot, the rear swing doors and the sliding side doors (depending on the version).

Unlocking the load compartment from inside the vehicle (Cargo versions)

Pressing button A-fig. 5 unlocks the loading area (rear swing doors/boot and sliding side doors) from inside the vehicle. If the LED is on, the load compartment is locked.

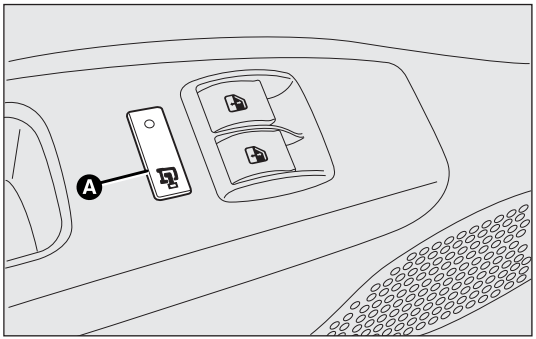

F0V0022m

fig. 5

Replacing the battery of the key with remote control fig. 6

To replace the battery, proceed as follows:

- ❒ press button A and bring the metal insert B to the open position;
- ❒ turn the screw C to using a fine screwdriver;
- ❒ take out the battery case D and replace the battery E, respecting its polarity;
- ❒ refit the battery case D inside the key and lock it by turning the screw C to .

Used batteries are harmful to the environment. You can dispose of them either in the correct containers as specified by law or by taking them to the Fiat Service Network, who will deal with their disposal.

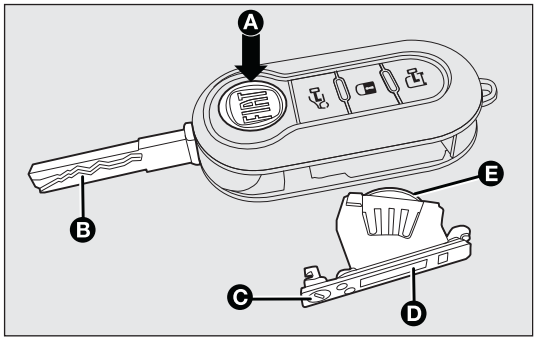

F0V0005m

fig. 6

Requesting additional remote controls

The system acknowledges up to 8 remote controls. Should a new remote control be necessary, contact the Fiat Service Network and be ready to present the CODE card, a personal identity document and the vehicle ownership documents.

DEAD LOCK

(for versions/markets where provided)

This safety device prevents the opening of the doors from inside the passenger compartment if there has been a break in attempt (e.g. a window has been broken).

The dead lock device therefore offers the best possible protection against break in attempts. We recommend engaging it whenever the vehicle is parked and left unattended.

WARNING

Once the dead lock system is engaged it is impossible to open the doors from inside the vehicle. Before engaging the system please therefore check that there is no one left on board.

WARNING

If the remote control battery is flat, the system can only be turned on by inserting the metal key in the door lock: in this case, the device remains active for the rear doors only.

Switching the device on

The system is automatically enabled on all the doors by pressing button 🔒 twice on the key with remote control.

The direction indicators flash twice to let you know that the device is active.

If one or more of the doors is not perfectly shut, the dead lock device will not be activated, thus preventing a person getting into the vehicle through the open door and, on shutting, it, remaining stuck inside the passenger compartment.

Switching the device off

The system is disabled automatically on every door when:

- ❒ unlocking the doors;
- ❒ turning the ignition key to MAR.

STARTING DEVICE

The key can be turned to three different positions fig. 7:

❒ STOP: engine off, key can be extracted, steering locked. Some electrical devices (e.g. radio, central door locking system, etc.) can operate.

❒ MAR: driving position. All electrical devices can operate.

❒ AVV: engine starting (temporary position).

The starting device is fitted with an electronic safety system that, should the engine fail to start, forces you to turn the ignition key back to STOP before repeating the starting operation.

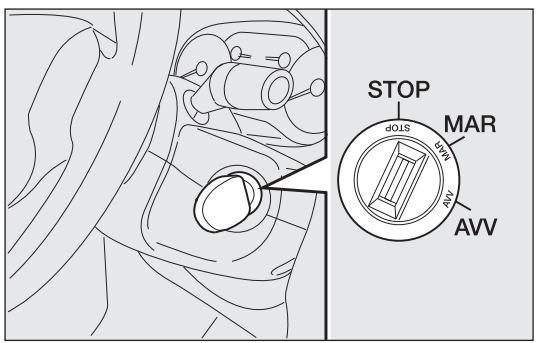

F0V0006m

fig. 7

STEERING LOCK

Engagement

When at STOP, remove the key and turn the steering wheel until it locks.

Disengagement

Move the steering wheel slightly as you turn the ignition key to MAR.

WARNING

If the starting device has been tampered with (e.g. an attempted theft), have it checked over by the Fiat Service Network as soon as possible.

WARNING

When getting out of the vehicle, always remove the key to prevent someone from accidentally activating the controls. Remember to engage the handbrake. Engage first gear if the vehicle is parked uphill or reverse gear if the vehicle is parked downhill. Never leave children unattended in the vehicle.

WARNING

Never extract the key while the vehicle is moving. The steering wheel should lock automatically as soon as it is turned. This is always the case, even when the vehicle is being towed.

WARNING

It is absolutely forbidden to carry out any aftersales operation involving steering system or steering column modifications (e.g. installing an anti-theft device) that could badly affect performance and safety, invalidate the warranty and also result in the vehicle failing to comply with regulations.

INSTRUMENT PANEL

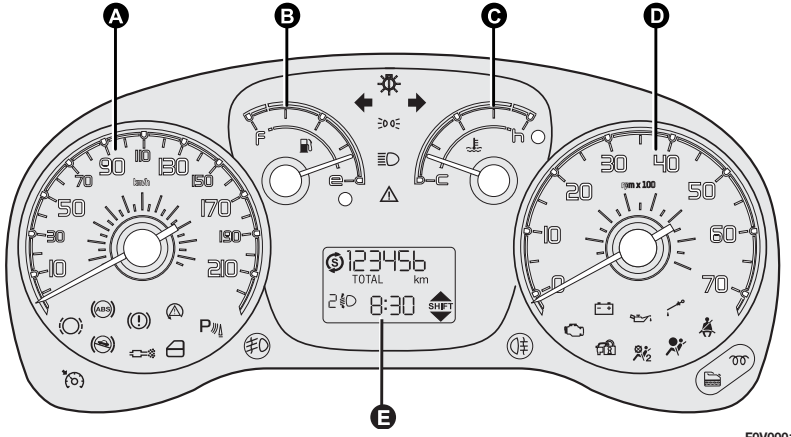

F0V0001m

fig. 9

Versions with digital display

A Speedometer

B Fuel level gauge with reserve warning light

C Engine coolant temperature gauge with overheating warning light

D Rev counter

E Digital display

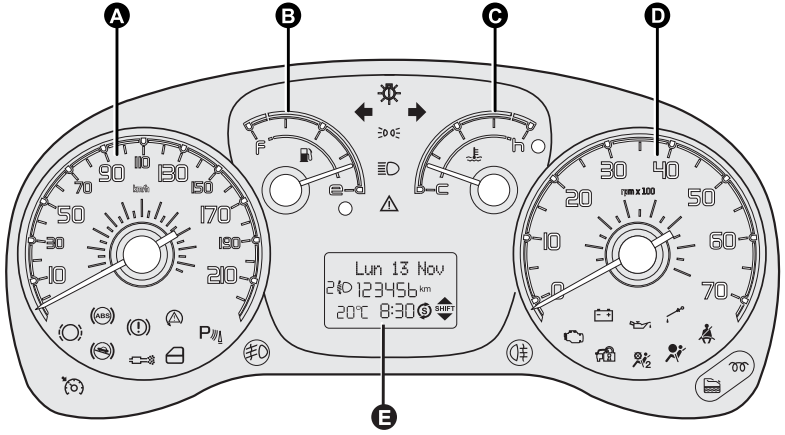

F0V0002m

fig. 10

Versions with multifunction display

A Speedometer

B Fuel level gauge with reserve warning light

C Engine coolant temperature gauge with overheating warning light

D Rev counter

E Multifunction display

INSTRUMENTS

Instrument background colour and type may vary according to the version.

SPEEDOMETER fig. 11

This shows the speed at which the vehicle is travelling.

REV COUNTER fig. 12

The rev counter shows the number of engine rpm.

WARNING The electronic injection control system gradually shuts off the flow of fuel when the engine is overrevving, resulting in a gradual loss of engine power.

When the engine is idling, the rev counter may indicate a gradual or sudden increase in the rate.

This is normal and does not indicate a fault. It may be caused, for example, by the operation of the climate control system or fan. In such cases, a slight increase in engine idle speed helps to sustain the battery charge.

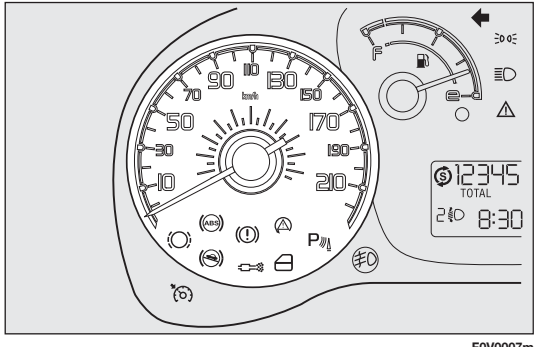

F0V0007m

fig. 11

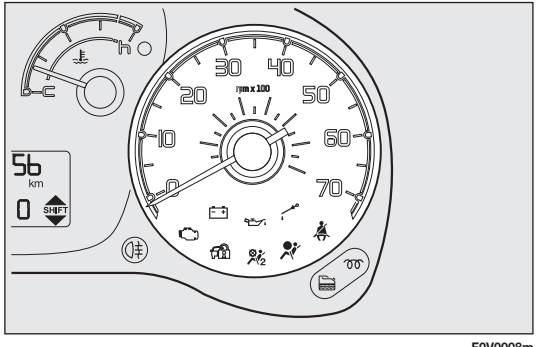

F0V0008m

fig. 12

FUEL LEVEL GAUGE fig. 13

This shows the amount of fuel left in the tank.

E tank empty.

F tank full (see "Refuelling").

Warning light A comes on to indicate that approximately 8-10 litres of fuel are left in the tank.

Do not travel with the fuel tank almost empty: the gaps in fuel delivery could damage the catalytic converter.

WARNING The needle will point to E and warning light A will flash to indicate a fault in the system. If this is the case, go to the Fiat Service Network to have the system checked.

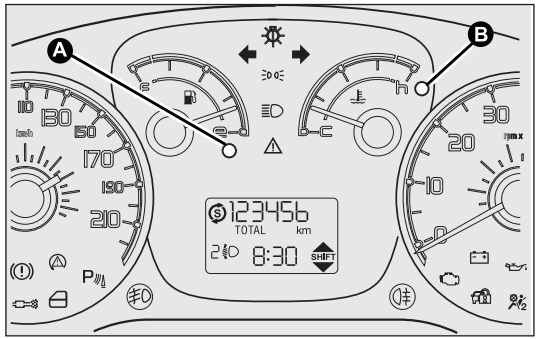

fig. 13

ENGINE COOLANT TEMPERATURE GAUGE fig. 13

This shows the temperature of the engine coolant and starts working when the fluid temperature exceeds approx. 50 °C.

In normal usage, the needle should hover around the middle of the scale.

C Low engine coolant temperature.

H High engine coolant temperature.

Warning light B may light up (and a message on the multifunction display may appear on certain versions) to indicate that the coolant temperature is too high; in this case, stop the engine and contact the Fiat Service Network.

If the needle enters the red zone, switch off the engine immediately and contact the Fiat Service Network.

DIGITAL DISPLAY

STANDARD SCREEN fig. 14

The standard screen shows the following information:

A Headlamp alignment position (only with dipped headlamps on).

B Milometer (distance covered in km or miles).

C Time (always displayed, even with the key extracted and the front doors closed).

D Start&Stop indicator (for versions/markets where provided).

E Gear Shift Indicator (for versions/markets where provided).

N.B. With the ignition key removed, when a door is opened, the display lights up and shows the time and total distance covered (in km or miles) for a few seconds.

CONTROL BUTTONS fig. 15

▲ To scroll up the screen and the menu options or increase the displayed value.

SET ESC Press to access the menu and/or go to the next screen or confirm your choice.
Hold down to go back to the standard screen.

▼ To scroll down the screen and the menu options or decrease the displayed value.

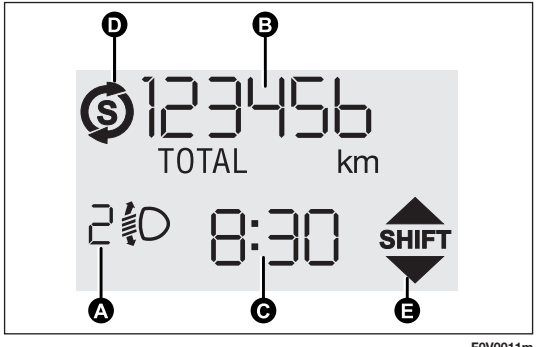

F0V0011m

fig. 14

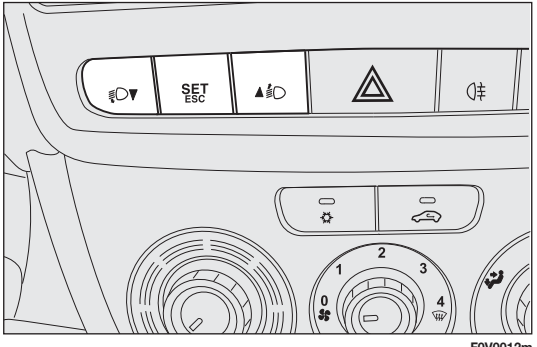

F0V0012m

fig. 15

N.B. Buttons ▲ and ▼ activate different functions in the following situations:

– within the menu, they scroll up and down;

– during setting operations they increase or decrease the value.

SETUP MENU

The menu comprises a series of functions arranged in a circle which can be selected through buttons ▲ and ▼ to access the settings described below.

The setup menu can be activated by pressing the SET ESC button.

By pressing buttons ▲ and ▼ you can scroll through the setup menu options.

Management modes differ from each other according to the option selected.

The menu comprises the following functions:

– ILLU

– SPEED

– HOUR

– UNIT

– BUZZ

– BAG P

– DRL

Selecting a menu option

– press the SET ESC button to select the menu option to set;

– press buttons ▲ and ▼ to select the new setting;

– press the SET ESC button to memorize the new setting and go back to the previous menu option.

Selecting "Set clock"

– press the SET ESC button to select the first value to change (hours);

– press buttons ▲ and ▼ to select the new setting;

– press the SET ESC button to memorize the new setting and go to the next value (minutes);

– after setting the value with the same procedure, you go back to the previous menu item.

Hold down the SET ESC button

– to quit the setup menu if you are in the menu;

– to quit to the menu if you are setting an option;

– to save only the settings already memorized (confirmed by pressing the SET ESC button).

The setup menu page is timed. Only the changes already memorized by pressing the SET ESC button are saved when you come out of the menu.

Adjusting the vehicle interior lighting (ILLU)

This function is available, with the dipped headlamps on and at night, to adjust the brightness of the instrument panel, buttons, radio display and automatic climate control display.

During the daytime, and with the dipped headlamps on, the instrument panel, buttons and radio and automatic climate control displays are set to maximum brightness.

Proceed as follows to adjust the brightness:

– press the SET ESC button: the display will show ILLU;

– press button ▲ or ▼ to adjust the brightness level;

– press the SET ESC button to go back to the menu screen or hold the button down to go back to the standard screen without saving.

Setting the speed limit (SPEEd)

This function is used to set a speed limit (km/h or mph); the driver is alerted when this limit is exceeded (see "Warning lights and messages").

To set the desired speed limit, proceed as follows:

– press SET ESC: the word SPEEd and the previously set unit (km/h or mph) will appear on the display;

– press button ▲ or ▼ to select speed limit activation (On) or deactivation (Off);

– when the function is activated (On), press buttons ▲ or ▼ to select the speed limit and press SET ESC to confirm.

N.B. You can select a speed between 30 and 200 km/h or 20 and 125 mph, depending on the chosen unit (see "Setting the unit of measurement (Unit)"). The setting will increase/decrease by five units each time button ▲/▼ is pressed. Hold down button ▲/▼ to increase/decrease the setting rapidly. Complete the setting with single presses of the button when you approach the required setting.

– press the SET ESC button to go back to the menu screen or hold the button down to go back to the standard screen without saving.

To cancel the setting, proceed as follows:

– press the SET ESC button: ON flashes in the display;

– press button ▼: OFF flashes in the display;

– press the SET ESC button to go back to the menu screen or hold the button down to go back to the standard screen without saving.

Setting the clock (Hour)

With this function, it is possible to set the time.

To do so, proceed as follows:

– press SET ESC: the hours flash in the display;

– press button ▲ or ▼ to adjust the value;

– press SET ESC: the minutes flash in the display;

– press ▲ or ▼ to adjust the value;

– press the SET ESC button to go back to the menu screen or hold the button down to go back to the standard screen without saving.

Setting the unit of measurement (Unit)

With this function, it is possible to set the distance unit.

To do so, proceed as follows:

– press SET ESC: the display shows the word Unit and the previously set unit of measurement (km or mi);

– press button ▲ or ▼ to select the required unit of measurement.

– press the SET ESC button to go back to the menu screen or hold the button down to go back to the standard screen without saving.

Adjusting the buzzer volume (BUZZ)

This function is used to adjust the volume of the buzzer that sounds in the event of failure/warning indications and when the SET ESC, ▲ and ▼ buttons are pressed.

To set the desired volume, proceed as follows:

– press SET ESC: the display shows the word bUZZ;

– press ▲ or ▼ to select the required volume (adjustable over eight levels).

– press the SET ESC button to go back to the menu screen or hold the button down to go back to the standard screen without saving.

Passenger front and side airbag activation/deactivation (BAG P)

(for versions/markets where provided)

This function is used to activate/deactivate the front and side passenger airbags (for versions/markets where provided).

Proceed as follows:

❒ press SET ESC and, after the message BAG P OFF (to deactivate) or BAG P On (to activate) is displayed by pressing buttons ▲ or ▼, press SET ESC again;

❒ the confirmation request message is displayed;

❒ press ▲ or ▼ to select YES (confirming activation/deactivation) or no (to cancel);

❒ press SET ESC to confirm setting and go back to the menu screen or hold the button down to go back to the standard screen without saving.

Daytime Running Lights (DRL)

This function allows you to activate/deactivate the daytime running lights.

Proceed as follows to switch this function on or off:

– press the SET ESC button: the display shows DRL;

– press button ▲ or ▼ to activate (On) or deactivate (Off) the daytime running lights;

– press the SET ESC button to return to the submenu screen or hold the button down to return to the main menu screen without saving;

MULTIFUNCTION DISPLAY

(for versions/markets where provided)

The vehicle may be equipped with a multifunction display that gives the driver useful information depending on the previous settings.

STANDARD SCREEN fig. 16

The standard screen shows the following information:

A Date.

B Milometer (distance covered in km or miles).

C Time (always displayed, even with the key extracted and the front doors closed);

D Outside temperature.

E Headlamp alignment position (only with dipped headlamps on).

F Start&Stop indicator (for versions/markets where provided)

G Gear Shift Indicator (for versions/markets where provided)

N.B. When one of the front doors is opened, the display turns on and shows the time and distance covered (in km or mi) for a few seconds.

CONTROL BUTTONS fig. 17

▲ To scroll up the screen and the menu options or increase the displayed value.

SET ESC Press to access the menu and/or go to the next screen or confirm your choice.
Hold down to go back to the standard screen.

▼ To scroll down the screen and the menu options or decrease the displayed value.

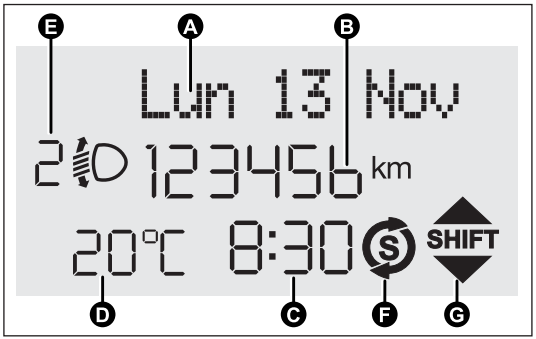

F0V0038m

fig. 16

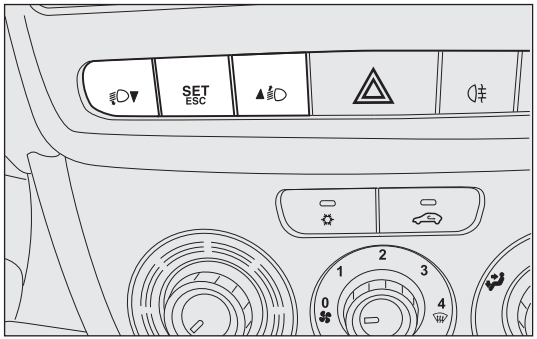

F0V0012m

fig. 17

N.B. Buttons ▲ and ▼ activate different functions in the following situations:

Adjusting the vehicle's interior lighting

– on the standard screen, they adjust the brightness of the instrument panel and the radio.

Setup menu

– within the menu, they scroll up and down;

– during setting operations they increase or decrease the value.

SETUP MENU

The menu comprises a series of functions arranged in a circle which can be selected through buttons ▲ and ▼ to access the settings described below. A submenu is provided for some items (Clock and Unit of measurement). The setup menu can be activated by pressing SET ESC. Pressing buttons ▲ or ▼ scrolls through the setup menu options. Management modes differ from each other according to the option selected. The menu comprises the following functions:

– LIGHTING

– SPEED BEEP

– TRIP B DATA

– SET TIME

– SET DATE

– RADIO INFO (if present)

– AUTOCLOSE

– UNIT OF MEASUREMENT

– LANGUAGE

– WARNING VOLUME

– BUTTON VOLUME

– SEAT BELT BUZZER
(only if previously disabled)

– SERVICE

– PASSENGER AIRBAG

– DAYTIME RUNNING LIGHTS

– EXIT MENU

Selecting an option from the main menu without a submenu:

– press SET ESC to select the main menu option you wish to set;

– press ▲ or ▼ to select the new setting;

– press the SET ESC button to memorize the new setting and go back to the previous main menu option.

Selecting an option from the main menu with a submenu:

– press the SET ESC button to display the first submenu option;

– press ▲ or ▼ to scroll through all the submenu options;

– press the SET ESC button to select the displayed submenu option and open the relevant setup menu;

– press ▲ or ▼ to select the new setting for this submenu option;

– press the SET ESC button to memorize the new setting and go back to the previous submenu option.

MENU FUNCTIONS

Adjusting the vehicle interior lighting

This function is available, with the dipped headlamps on and at night, to adjust the brightness of the instrument panel, buttons, radio display and automatic climate control display.

During the daytime, and with the dipped headlamps on, the instrument panel, buttons and radio and automatic climate control displays are set to maximum brightness.

Proceed as follows to adjust the brightness:

– press SET ESC: the previously set brightness level flashes in the display;

– press button ▲ or ▼ to adjust the brightness level;

– press the SET ESC button to go back to the menu screen or hold the button down to go back to the standard screen without saving.

Speed beep (Speed limit)

This function makes it possible to set the vehicle speed limit (km/h or mph). When this limit is exceeded the driver is immediately alerted (see "Warning lights and messages" section).

To set the desired speed limit, proceed as follows:

– press the SET ESC button: the display shows the words Speed Beep;

– press button ▲ or ▼ to select speed limit activation (On) or deactivation (Off);

– if the function is on, press ▲ or ▼ to select the required speed limit and then press SET ESC to confirm;

N.B. The speed may be set anywhere between 30 and 200 km/h or 20 and 125 mph, depending on the previously chosen unit (see "Setting the unit of measurement (Unit)"). The setting will increase/decrease by five units each time button ▲/▼ is pressed. Hold down button ▲/▼ to increase/decrease the setting rapidly. Complete the setting with single presses of the button when you approach the required setting.

– press the SET ESC button to go back to the menu screen or hold the button down to go back to the standard screen without saving.

To cancel the setting, proceed as follows:

– press the SET ESC button: ON flashes in the display;

– press button ▼: OFF flashes in the display;

– press the SET ESC button to go back to the menu screen or hold the button down to go back to the standard screen without saving.

Trip B data (Activating Trip B)

This function may be used to activate (On) or deactivate (Off) the Trip B display (partial trip).

For more information see the „Trip computer" section.

For activation/deactivation, proceed as follows:

– press the SET ESC button again: the display flashes On or Off depending on what was previously set;

– press ▲ or ▼ to select;

– press the SET ESC button to go back to the menu screen or hold the button down to go back to the standard screen without saving.

Setting the time (Clock)

This function allows you to set the clock through two submenus: "Time" and "Mode".

To carry out the adjustment, proceed as follows:

– press SET ESC: the display shows the two submenus "Time" and "Mode";

– press ▲ or ▼ to move between the two submenus;

– once you have selected a submenu, press SET ESC;

– when you select “Time”, pressing SET ESC makes the hours flash on the display;

– press ▲ or ▼ to adjust the value;

– press SET ESC: the minutes flash in the display;

– press ▲ or ▼ to adjust the value.

N.B. The setting will increase or decrease by one unit each time ▲ or ▼ is pressed. Hold the button down to increase/decrease the setting rapidly. Complete the setting with single presses of the button when you approach the required setting.

– when you select “Mode”, pressing SET ESC makes the mode flash on the display;

– press ▲ or ▼ to select 24h or 12h.

When you have made the required adjustments, press SET ESC to go back to the submenu screen or hold the button down to go back to the main menu screen without saving.

– hold down SET ESC again to go back to the standard screen or main menu, depending on which point in the menu you have reached.

Set date (Setting the date)

Using this function it is possible to change the date (day – month – year).

To update, proceed as follows:

– press SET ESC: the year flashes on the display;

– press ▲ or ▼ to adjust the value;

– press SET ESC: the month flashes in the display;

– press ▲ or ▼ to adjust the value;

– press SET ESC: the day flashes in the display;

– press ▲ or ▼ to adjust the value.

N.B. The setting will increase or decrease by one unit each time ▲ or ▼ is pressed. Hold the button down to increase/decrease the setting rapidly. Complete the setting with single presses of the button when you approach the required setting.

– press the SET ESC button to go back to the menu screen or hold the button down to go back to the standard screen without saving.

Radio info (Display audio information)

With this function the display shows information relevant to the radio.

– Radio: selected radio station frequency or RDS message, automatic tuning activation or AutoSTore;

– Audio CD, CD MP3: track number;

To show the radio information in the display (On) or clear it (Off), proceed as follows:

– press the SET ESC button: the display flashes On or Off depending on the previous setting;

– press ▲ or ▼ to select;

– press the SET ESC button to go back to the menu screen or hold the button down to go back to the standard screen without saving.

Autoclose (Automatic central locking with the vehicle in motion)
(for versions/markets where provided)

When activated (On), this function automatically locks the doors when the car speed exceeds 20 km/h.

Proceed as follows to switch this function on or off:

– press the SET ESC button: the display shows a submenu;

– press the SET ESC button again: the display flashes On or Off depending on the previous setting;

– press ▲ or ▼ to select;

– press the SET ESC button to return to the submenu screen or hold the button down to return to the main menu screen without saving;

– hold down SET ESC again to go back to the standard screen or main menu, depending on which point in the menu you have reached.

Unit of measurement (Setting the unit of measurement)

With this function it is possible to set the measurement units through three submenus: “Distance”, “Consumption” and “Temperature”.

To set the desired measurement unit, proceed as follows:

– press SET ESC to display the three submenus;

– press ▲ or ▼ to move between the three submenus;

– once you have selected a submenu, press SET ESC;

– when you select “Distance”, pressing SET ESC makes km or mi appear in the display (depending on the previous setting);

– press ▲ or ▼ to choose;

– when you select “Consumption”, pressing SET ESC makes km/l, l/100km or mpg appear on the display depending on the previous setting;

If the set distance unit is “km”, you can set the fuel consumption unit to km/l or l/100km depending on the amount of fuel consumed.

If the distance unit is set to mi, fuel consumption is displayed in mpg.

– press ▲ or ▼ to select;

– when you select “Temperature”, pressing SET ESC makes °C or °F appear on the display depending on the previous setting;

– press ▲ or ▼ to select;

When you have made the required adjustments, briefly press MENU ESC to go back to the submenu screen or hold the button down to go back to the main menu screen without saving.

– hold down SET ESC again to go back to the standard screen or main menu, depending on which point in the menu you have reached.

Language (Selecting the language)

Display messages can be shown in different languages: Italian, English, German, Portuguese, Spanish, French, Dutch, Polish and Turkish.

To set the required language, proceed as follows:

– press SET ESC: the previously set language flashes in the display;

– press ▲ or ▼ to select;

– press the SET ESC button to go back to the menu screen or hold the button down to go back to the standard screen without saving.

Warning volume (Adjusting the failure/warning buzzer volume)

This function allows the volume of the buzzer which accompanies the display of failures/warnings to be adjusted (over 8 levels).

To set the desired volume, proceed as follows:

– press SET ESC: the previously set volume level flashes in the display;

– press ▲ or ▼ to adjust the value;

– press the SET ESC button to go back to the menu screen or hold the button down to go back to the standard screen without saving.

Button volume (Adjusting the button volume)

This function allows you to adjust (over 8 levels) the volume of the buzzer that can be heard when the SET ESC, ▲ and ▼ buttons are pressed.

To set the desired volume, proceed as follows:

– press SET ESC: the previously set volume level flashes in the display;

– press ▲ or ▼ to adjust the value;

– press the SET ESC button to go back to the menu screen or hold the button down to go back to the standard screen without saving.

Seat belt buzzer (Reactivating buzzer for SBR indication)

This function can only be displayed after the Fiat Service Network has deactivated the SBR system (see "SBR system" in the "Safety" section).

Service (Programmed maintenance)

Through this function it is possible to display information related to regular maintenance intervals.

This information can be consulted as follows:

– press SET ESC: the service intervals appear in the display in km or mi, depending on the previous setting (see "Unit of distance" paragraph);

– press the SET ESC button to return to the menu screen or hold the button down to return to the standard screen.

N.B. The „Scheduled Servicing Plan" provides for the vehicle to be serviced every 30,000 km/35,000 km (depending on the version) (or the equivalent in miles). This is automatically displayed, when the ignition key is at MAR, from 2,000 km (or the equivalent in miles) and reappears every 200 km (or the equivalent in miles). Below 200 km the reminders become more frequent. The indication will appear in kilometres or miles depending on the measurement unit settings. When the next scheduled service is approaching, the message „Service" will appear on the display, followed by the number of kilometres or miles left, when the key is turned to MAR. Go to the Fiat Service Network, where the „Planned Maintenance Programme" operations will be performed and the message will be reset.

Activating/deactivating passenger front and side airbags
(for versions/markets where provided)

This function is used to activate/deactivate the front and side passenger airbags (for versions/markets where provided).

Proceed as follows:

– press SET ESC and, after the message Bag pass: Off (to deactivate) or Bag pass On (to activate) is displayed by pressing buttons ▲ or ▼, press SET ESC again;

– the confirmation request message appears in the display;

– press ▲ or ▼ to select Yes (confirming activation/deactivation) or No (to cancel);

– press SET ESC to confirm the setting and go back to the menu screen or hold the button down to go back to the standard screen without saving.

Daytime Running Lights (DRL)

This function allows you to activate/deactivate the daytime running lights.

Proceed as follows to switch this function on or off:

– press the SET ESC button to display a submenu;

– press the SET ESC button again: the display flashes On or Off depending on what was previously set;

– press ▲ or ▼ to select;

– press the SET ESC button to return to the submenu screen or hold the button down to return to the main menu screen without saving;

– hold down SET ESC again to go back to the standard screen or main menu, depending on which point in the menu you have reached.

Exit menu

This function closes the settings listed on the menu screen.

Press SET ESC to go back to the standard screen without saving.

Press ▼ to return to the first menu option (Speed beep).

TRIP COMPUTER

General information

The Trip computer is used to display information on vehicle operation when the ignition key is turned to MAR. This function allows you to define two separate trips, called "Trip A" and "Trip B", for monitoring the vehicle's „complete mission" (journey) in a reciprocally independent manner. Both functions can be reset (reset – start of a new journey).

"Trip A" is used to display the figures relating to:

– Range
– Distance travelled
– Average consumption
– Instant consumption
– Average speed
– Travel time (driving time).

"Trip B", available on multifunction display only, is used to display the figures relating to:

– Distance travelled B
– Average consumption B
– Average speed B
– Travel time B (driving time).

N.B. "Trip B" may be disabled (see "Activating Trip B"). "Range" and "Instant consumption" parameters cannot be reset.

Values displayed

Range

Shows the approximate distance the vehicle can travel with the amount of fuel left in the tank. The display will show the reading "----" when the following events take place:

– range is lower than 50 km (or 30 mi)

– vehicle is left parked with the engine running for a long time.

WARNING The range can be affected by several factors: driving style (see "Driving style" in the "Starting and driving" section), type of route (motorway, towns and cities, mountain roads, etc.), conditions of use (load, tyre pressures, etc.). Trip planning must therefore take the above into account.

Distance travelled

Shows the distance covered since the start of the new journey.

Average consumption

Shows the approximate average fuel consumption since the start of the new journey.

Current consumption

Shows the constantly updated fuel consumption. The reading "----" appears on the display if the vehicle is parked with the engine running.

Average speed

Shows the average speed of the vehicle by using the overall time elapsed since the start of a new journey.

Journey time

Shows the time elapsed since the start of a new journey.

WARNING If information is not available, the reading "----" appears instead of the Trip computer values. Counting the different values will resume regularly when normal operation condition is restored. This will not reset any of the values displayed before the failure or start a new journey.

TRIP control button fig. 18

The TRIP button, located on the top of the right steering column lever, is used (with ignition key at MAR) to display these values and reset them to start a new journey:

– press briefly to display the different values;

– hold down to reset and then start a new journey.

New journey

The new journey begins after:

– "manual" resetting by the user, by pressing the relevant button;

– "automatic" resetting, when the distance travelled reaches 99999.9 km or 9999.9 km (depending on the type of display) or when the travel time reaches 99.59 (99 hours and 59 minutes) or 999.59 (999 hours and 59 minutes) depending on the type of display fitted;

– disconnection/reconnection of the battery.

WARNING The reset operation when "Trip A" details are being displayed only resets the information associated with this function.

WARNING The reset operation when "Trip B" details are being displayed only resets the information associated with this function.

Start trip procedure

With the ignition key at MAR, reset by pressing the TRIP button and holding it down for more than two seconds.

Exit Trip

To quit the Trip function, hold down SET ESC for more than two seconds.

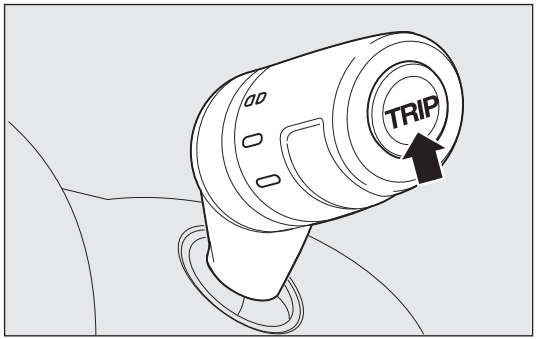

F0V0010m

fig. 18

SEATS

DRIVER'S SEAT

(for Cargo versions where provided)

WARNING

All adjustments must be made with the vehicle stationary.

Longitudinal adjustment

Lift the lever A-Fig.19 and push the seat forwards or backwards: in the driving position your arms should be slightly bent and your hands should rest on the rim of the steering wheel.

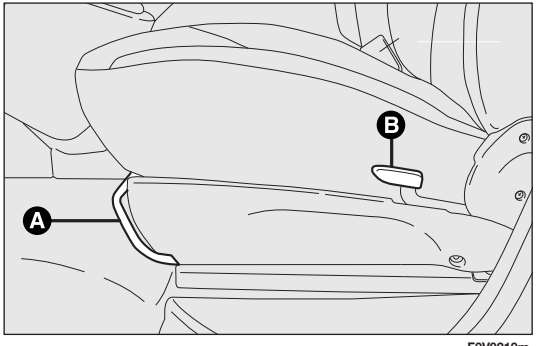

fig. 19

WARNING

After releasing the adjustment lever, always check that the seat is locked into place by trying to move it back and forth. If it is not locked, the seat may move unexpectedly and make you lose control of the vehicle.

Reclining backrest adjustment

Lift lever B-fig. 19 and, slightly detaching the back from the backrest, accompany the movement of the backrest until it is in the desired position.

DRIVER'S SEAT fig. 20

(for Doblò/Doblò Combi/Cargo versions, where provided)

WARNING

All adjustments must be made with the vehicle stationary.

Lengthwise adjustment

Lift lever A and push the seat forwards or backwards: in the driving position your arms should rest on the rim of the steering wheel.

WARNING

After releasing the adjustment lever, always check that the seat is locked into place by trying to move it back and forth. If it is not locked, the seat may move unexpectedly and make you lose control of the vehicle.

Backrest inclination adjustment

Turn knob B.

Driver's seat height adjustment

(for versions/markets where provided)

Operate lever C to lift or lower the rear part of the cushion to achieve the most comfortable driving position.

WARNING Adjustment must only be carried out when seated in the relevant seat.

Driver's seat lumbar support adjustment

(for versions/markets where provided)

Turn knob D-fig. 20 to adjust the backrest support.

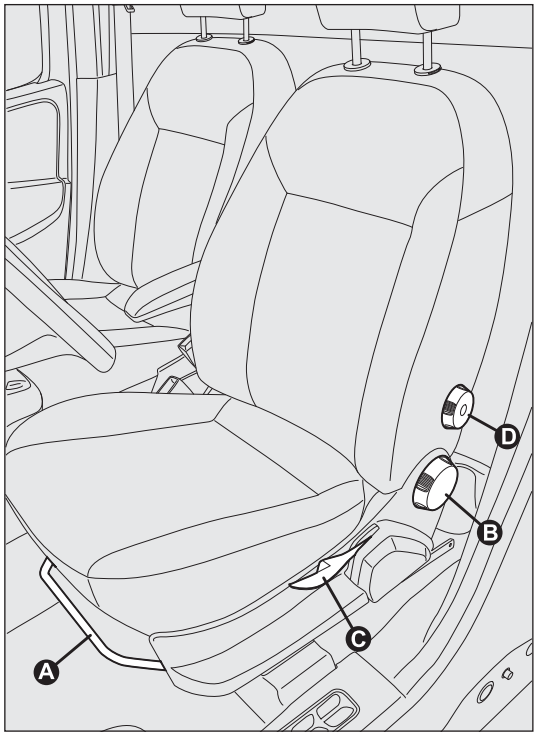

fig. 20 F0V0013m

Seat heating
(for versions/markets where provided)

With the key turned to MAR, press button A-fig. 21 to switch the function on/off.

When the function is enabled, the LED on the button turns on.

FOLDAWAY PASSENGER SEAT
(for versions/markets where provided)

The passenger seat can be folded away on some Cargo versions.

WARNING

Close the dashboard console before folding the retractable front passenger seat to avoid damage.

Completely retract the seat for a total folding down avoiding interference with the dashboard.

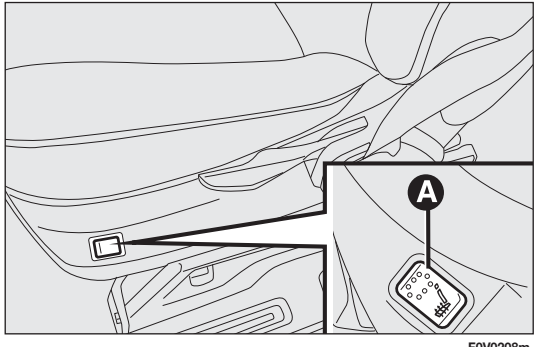

fig. 21

Seat folding

To fold the seat, proceed as follows:

- ❒ open the passenger side door;
- ❒ pull lever A-fig. 22 and fold the backrest forwards in the direction indicated by the arrow;

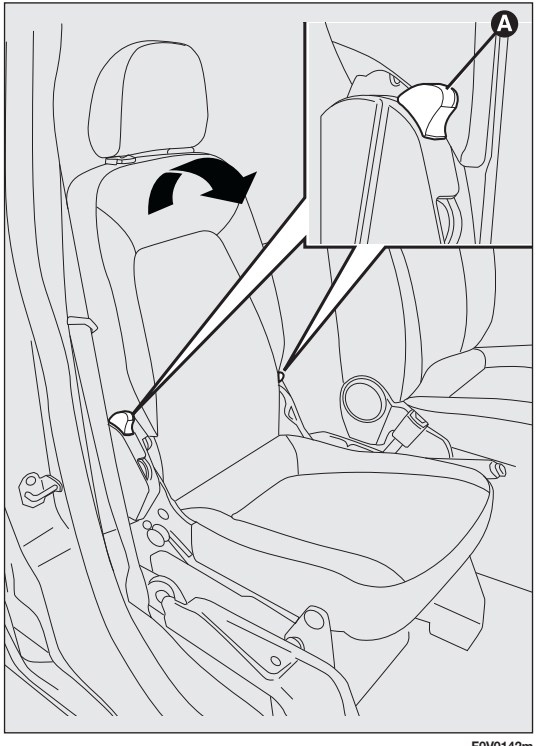

fig. 22

❒ then push the backrest B-fig. 23 down: the seat is now completely folded over on itself into the "table" position;

❒ pull flap C-fig. 24 and push the backrest down further: the seat is now completely folded away.

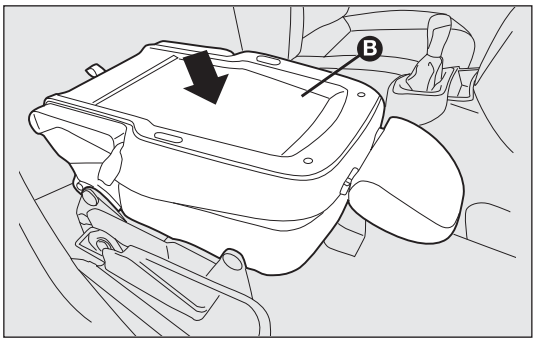

F0V0143m

fig. 23

Repositioning the seat

To return the seat back to its normal position, proceed as follows:

❒ grab flap A-fig. 25 and lift the backrest;

❒ pull on levers B-fig. 26 and lift the seat up further.

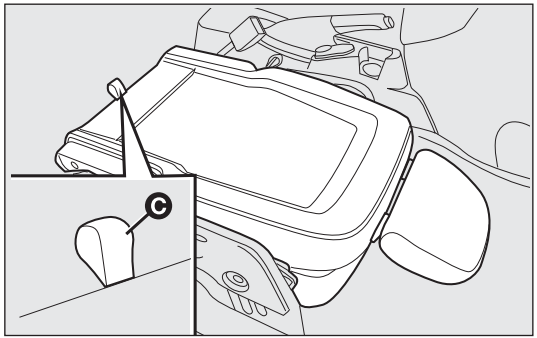

F0V0144m

fig. 24

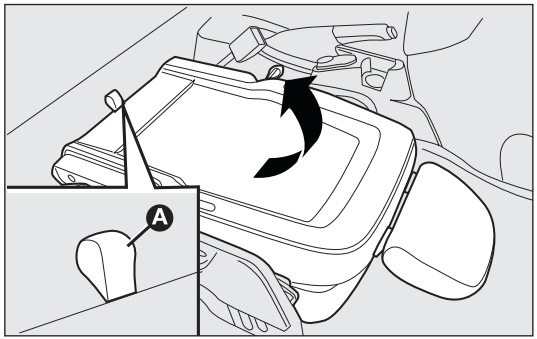

F0V0145m

fig. 25

WARNING

When the passenger seat is folded away, the space created cannot be used for loading. When the vehicle is in motion, you are therefore advised to remove or secure any objects that might interfere with the driver. If there is no partition between the cab and the load compartment, tall objects or packages may take up part of the passenger area. Make sure that these items are well secured by using the available hooks and that they cannot interfere with the driver.

ACCESS TO THE REAR SEATS

(Doblò and Doblò Combi versions)

To access the rear seats, open one of the sliding side doors (see "Doors" in this section).

SEAT THAT CAN BE FOLDED INTO TABLE

(Doblò and Doblò Combi versions, where provided)

On some versions the seat can be folded into a table position.

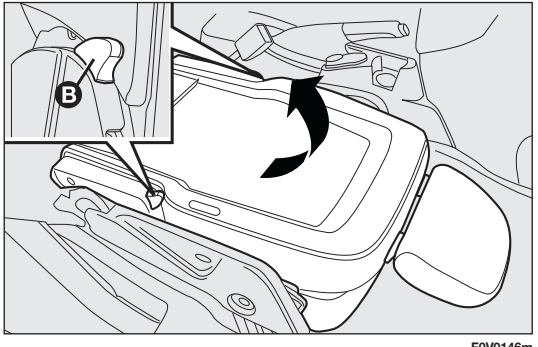

F0V0146m

fig. 26

WARNING

Close the dashboard console before folding the front passenger seat in table position to avoid damage.

Completely retract the seat in table position for a total folding down avoiding interference with the dashboard.

WARNING Only move the seat when there are no rear passengers.

Seat folding

- ❒ Open the passenger side door;
- ❒ Pull lever A and fold the backrest forwards in the direction indicated by the arrow;
- ❒ Then push the backrest B down: the seat is now completely folded over on itself into the "table" position;

Repositioning the seat:

- ❒ operate lever A and lift the backrest upwards.

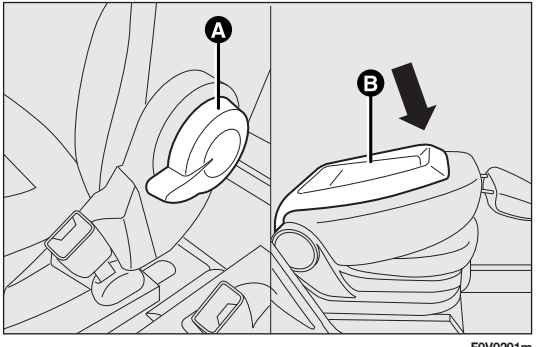

F0V0201m

fig. 26b

3rd ROW SEAT MOVEMENTS

Proceed as follows:

- ❒ fully lower the rear seat head restraints;
- ❒ move the seat belt to the side, making sure that it is fully extended and not twisted;
- ❒ lift lever A-fig. 26c retaining the backrest and fold the latter forwards. When you lift the lever, you will see a red band;
- ❒ pull the tape B-fig. 26c behind the seat backrests and fold the seats and the backrests forwards;

N.B. On the split seats, there are rubber bands on the lower edge of the cushion so you can attach the folded seat to the 2nd row rear seat head restraint rods.

3rd ROW SEAT REMOVAL

Proceed as follows:

- ❒ remove the rear seat head restraints;
- ❒ remove the rolling curtain from its housing;

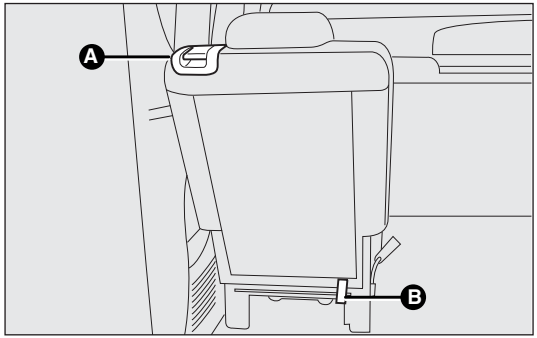

F0V0205m

fig. 26c

- ❒ move the seat belt to the side, making sure that it is fully extended and not twisted;
- ❒ lift lever A-fig. 26c retaining the backrest and fold the latter forwards. When you lift the lever, you will see a red band.
- ❒ pull the tape B-fig. 26c behind the seat backrests and fold the seats and the backrests forwards.
- ❒ position the head restraint using the openings under the cushion to insert the rods;
- ❒ push the lever as illustrated in fig. 26d;
- ❒ remove the seat from the attachments on the floor.

3rd ROW SEAT REPOSITIONING

Proceed as follows:

- ❒ attach the hooks to the floor fig. 26e;
- ❒ push the lever as illustrated in fig. 26d and pull it to make sure that the seat is still correctly secured;
- ❒ withdraw the head restraint under the cushion;

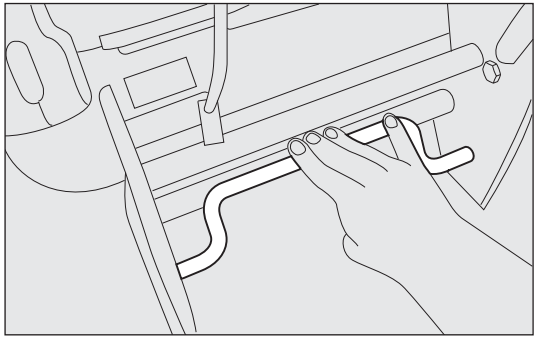

F0V0206m

fig. 26d

- ❒ fold the cushion and the backrest over;
- ❒ reposition the head restraint;
- ❒ re-position the rolling curtain in its housing.

WARNING Make sure that the seat is properly secured to the fastenings on the floor and that the lever A-fig. 26c is tightened (red band not visible).

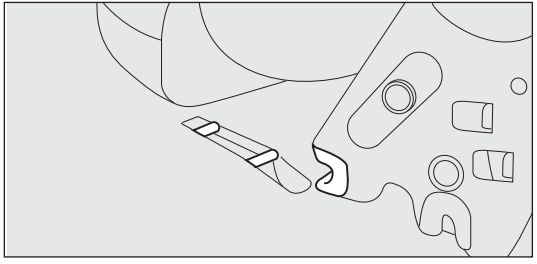

F0V0207m

fig. 26e

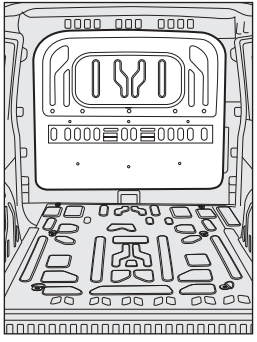

F0V0102m

fig. 27

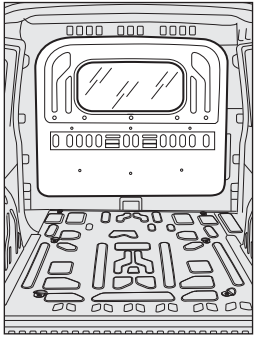

F0V0103m

fig. 28

PARTITIONS

(for versions/markets where provided)

CARGO VERSIONS

Plated fixed partition fig. 27

Separates the passenger area from the load compartment.

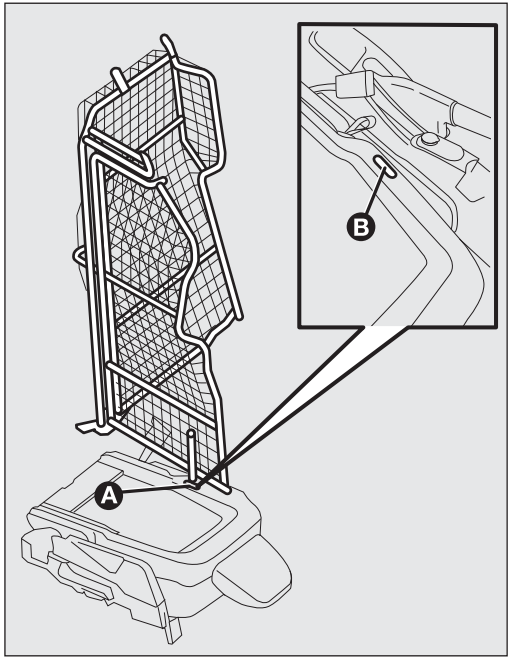

F0V0219m

fig. 29

Fixed glazed partition fig. 28

This has a central glass so you can keep an eye on your load.

Split swing partition fig. 29

If you need to carry awkward shaped items, you can open the partition as follows:

- ❒ lay the foldaway passenger seat flat (see previous pages);
- ❒ from inside the load compartment, release the pin A on the back of the partition and attach it to the backrest of the folded seat B.

To put the partition back in its normal position, follow the same procedure in reverse.

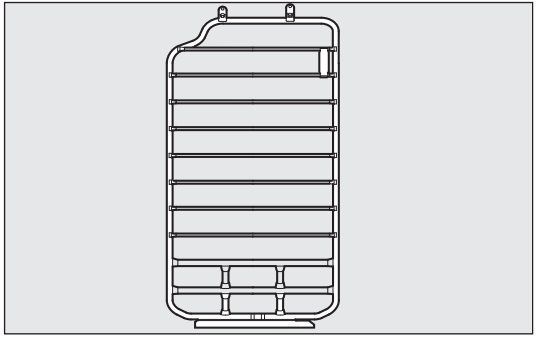

F0V0169m

fig. 30

LADDER BULKHEAD BEHIND DRIVER fig. 30

(for versions/markets where provided)

On some versions there is a fixed ladder that protects the driver if the load transported is unstable.

COMBI VERSIONS N1

Fixed partition fig. 31

(for versions/markets where provided)

This is located behind the backrest of the rear seats.

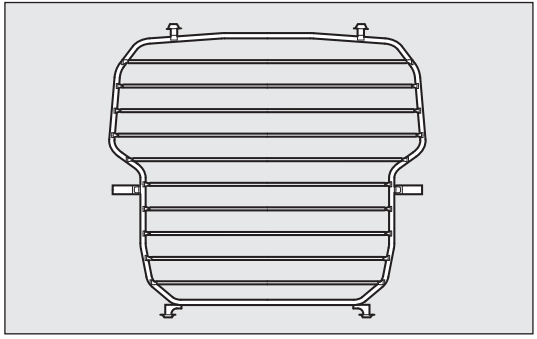

F0V0170m

fig. 31

HEAD RESTRAINTS

FRONT fig. 32

These are height-adjustable and lock into place automatically.

Adjustment

- ❒ upwards adjustment: lift the head restraint until it locks.
- ❒ downwards adjustment: press button A and lower the head restraint.

WARNING

All adjustments must only be carried out with the vehicle stationary and the engine off. Head restraints must be adjusted so that the head, rather than the neck, rests on them. This is the only way they can protect your head correctly.

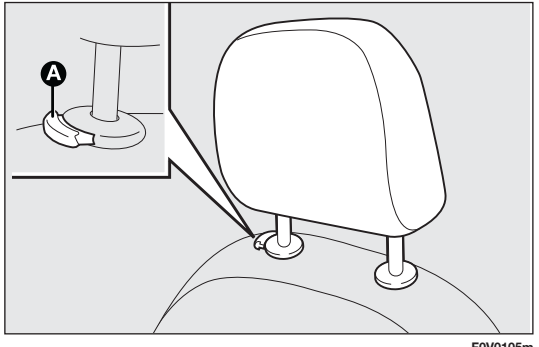

fig. 32

WARNING

To make the best use of the head restraint protective action, adjust the seat back so that your trunk is upright and keep your head as close as possible to the head restraint.

REAR fig. 33

(for versions/markets where provided)

To use them, lift them up.

To put them away, press buttons A and push the head restraints down into the backrest.

To extract the head restraints, lift them until you hear the click (which indicates they are in the position of use).

WARNING When the rear seats are in use, the head restraints must always be in the position of use.

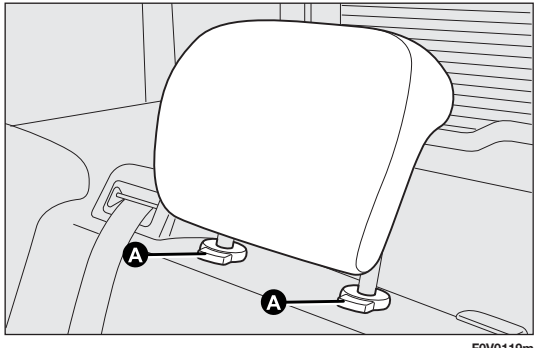

fig. 33

STEERING WHEEL

The height and axial position of the steering wheel can be adjusted on all versions.

To carry out the adjustment, proceed as follows:

- ❒ release lever A-fig. 34 by pushing it forwards (position 1);
- ❒ adjust the steering wheel;
- ❒ lock lever A by pulling it towards the steering wheel (position 2).

WARNING

The adjustments should only be carried out with the vehicle stationary and the engine turned off.

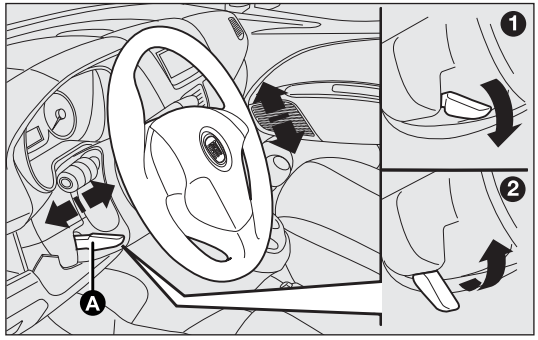

F0V0014m

fig. 34

WARNING

It is absolutely forbidden to carry out any after-sales operations involving steering system or steering column modifications (e.g. installing an anti-theft device). This could affect performance and safety, invalidate the warranty and also result in the vehicle failing to comply with regulations.

REAR VIEW MIRRORS

INTERIOR REAR VIEW MIRROR fig. 35

(for versions/markets where available)

The mirror is fitted with a safety device that causes its release in the event of a violent impact with the passenger.

Lever A can be used to move the mirror to two different positions: normal or antiglare.

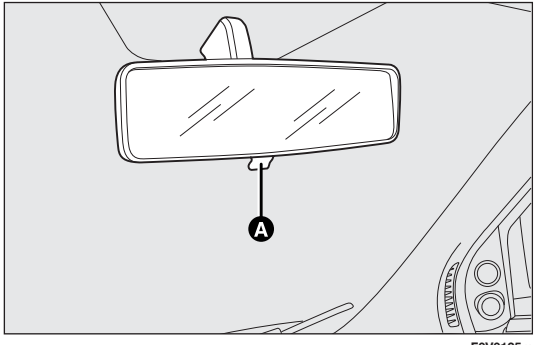

F0V0125m

fig. 35

DOOR MIRRORS

Manual mirror folding

When required (for example when the shape causes difficulty in narrow spaces), it is possible to fold the mirrors by moving them from position A-fig. 36 to position B.

WARNING

When driving, the mirrors should always be in position A-fig. 36.

Because the door mirrors are curved, they slightly alter the perception of distance.

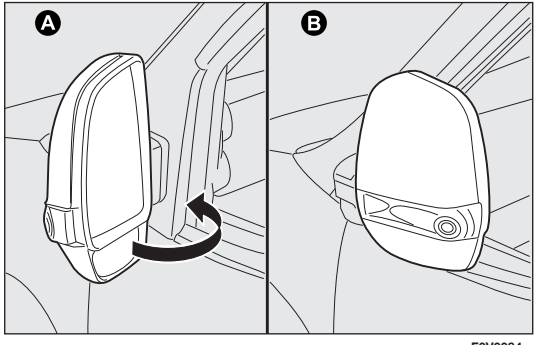

F0V0084m

fig. 36

Manual adjustment

From inside the vehicle, use device A-fig. 37.

Electrical adjustment
(for versions/markets where provided)

You can only adjust the door mirrors electrically when the ignition key is turned to MAR.

Proceed as follows:

❒ use switch A-fig. 38 to select the desired door mirror (left or right);

❒ move switch A to position B and manipulate it to adjust the left door mirror;

❒ move switch A to position D and manipulate it to adjust the right door mirror.

Once you have finished the adjustment, return switch A to intermediate locking position C.

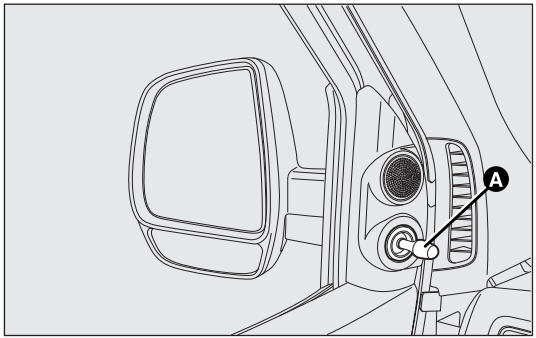

F0V0120m

fig. 37

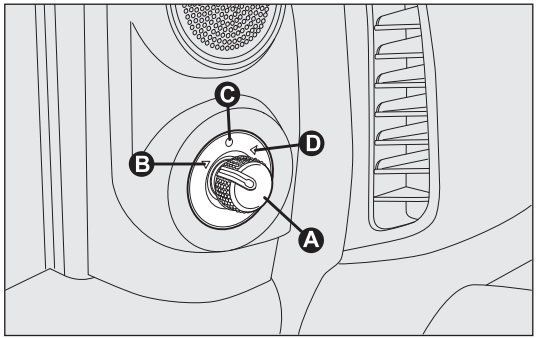

F0V0015m

fig. 38

HEATING AND VENTILATION SYSTEM

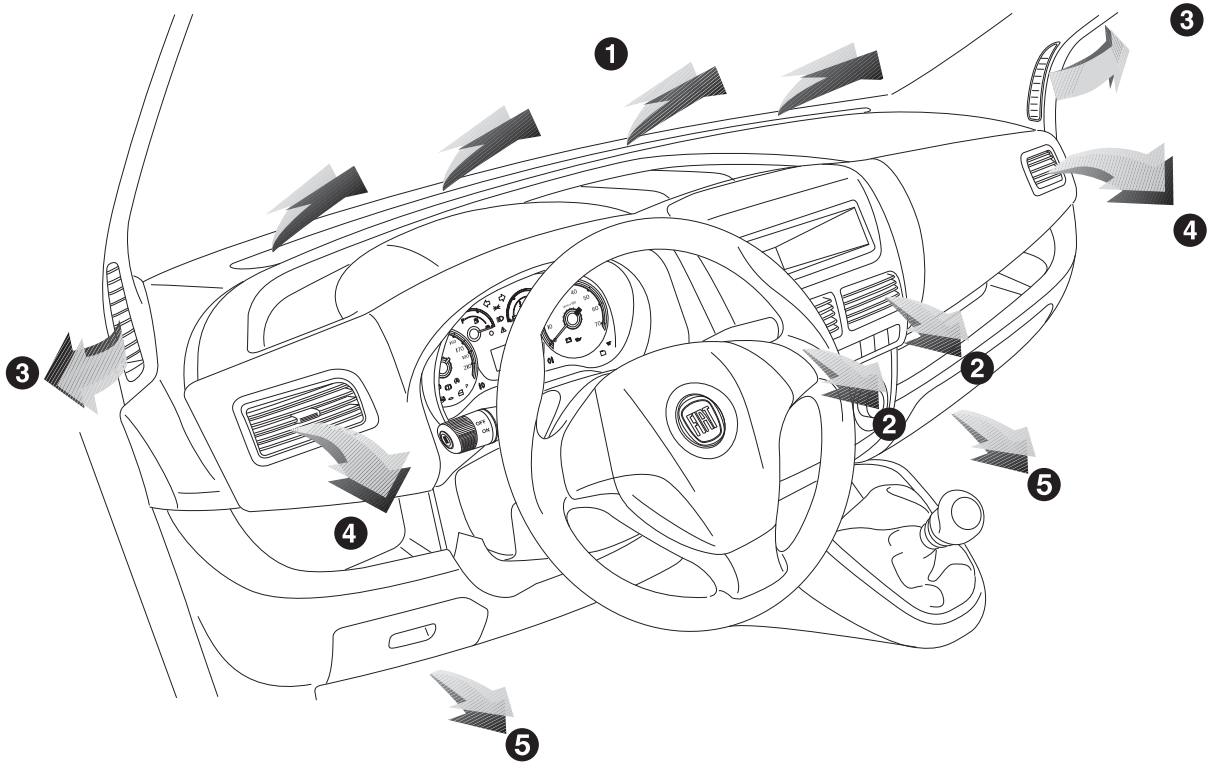

F0V0016m

fig. 39

1. Upper fixed diffuser – 2. Adjustable central diffusers – 3. Fixed side diffusers – 4. Adjustable side diffusers – 5. Footwell diffusers.

ADJUSTABLE CENTRAL AND SIDE DIFFUSERS figs. 40-41

Use tab A to adjust the diffusers as required.

To close the vents, slide tab A sideways from position 1-fig. 40 to position 2-fig. 41.

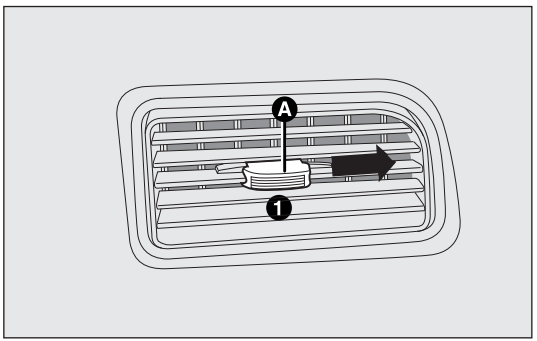

F0V0017m

fig. 40 – vent open

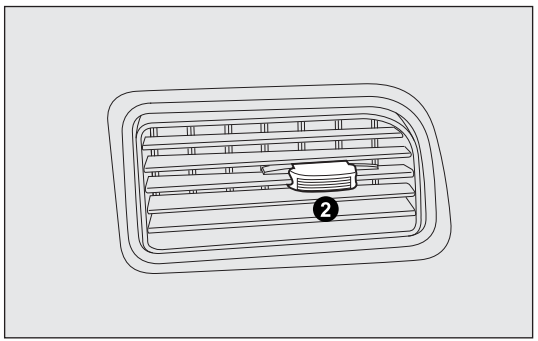

F0V0018m

fig. 41 – vent closed

HEATING AND VENTILATION

CONTROLS fig. 42

A: air temperature adjustment knob (hot/cold air mixing)

B: fan activation knob

C: air distribution knob.

D: internal air recirculation on/off button

E: heated rear windscreen on/off button (for versions/markets, where available).

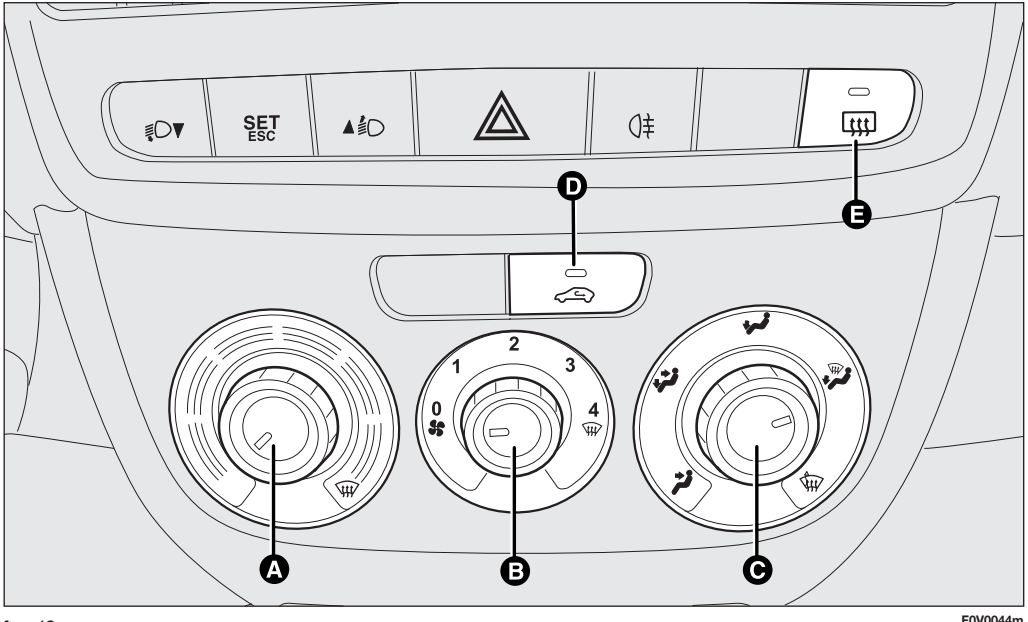

fig. 42

F0V0044m

TEMPERATURE COMFORT

Knob C enables the air introduced into the vehicle to reach all parts of the passenger compartment through five distribution options:

- delivers air from central and side diffusers;
- warms the feet and keeps the face cool (bi-level function)
- warms up the passenger compartment more quickly;
- warms up the passenger compartment and, at the same time, demists the windscreen;
- demists and defrosts the windscreen and front side windows.

HEATING

Proceed as follows:

❒ turn knob A fully to the right (to);

❒ turn knob B to the required speed;

❒ turn knob C to:

- to warm the feet and, at the same time, demist the windscreen;
- to send air to the feet and introduce fresher air from the central and dashboard diffusers;
- to warm up quickly.

FAST HEATING

Proceed as follows:

❒ close all the diffusers in the dashboard;

❒ turn knob A to ;

❒ turn knob B to 4 ;

❒ turn knob C to .

RAPID WINDSCREEN AND FRONT SIDE WINDOWS DEMISTING/ DEFROSTING (MAX-DEF function)

Proceed as follows:

❒ turn knob A to ;

❒ turn knob B to 4 ;

❒ turn knob C to ;

❒ turn off internal air recirculation (button D LED off).

After demisting/defrosting, operate the controls as normal to restore the required comfort.

Window demisting

In the event of considerable external moisture and/or rain and/or large differences in temperature inside and outside the passenger compartment, perform the following preventive window demisting procedure:

- ❒ turn off internal air recirculation (button D LED off);
- ❒ turn knob A to ;
- ❒ turn knob B to 2;
- ❒ turn knob C to with the option of moving to position if there is no sign of the windows steaming up.

REGULATING THE FAN SPEED

To ventilate the passenger compartment properly, proceed as follows:

- ❒ fully open the central and side air diffusers;
- ❒ turn knob A to the blue section;
- ❒ turn knob B to the required speed;
- ❒ turn knob C to ;
- ❒ turn off internal air recirculation (button D LED off).

INTERNAL AIR RECIRCULATION ACTIVATION

Press button D: when the function is on, the button LED lights up.

It is advisable to switch the internal air recirculation on while standing in queues or in tunnels to prevent the introduction of polluted air.

Do not use the function for a long time, particularly if there are several passengers on board, to prevent the windows from steaming up.

WARNING The air recirculation system makes it possible to reach the required heating or cooling conditions faster. Do not use the air recirculation function on rainy/cold days as it would considerably increase the possibility of the windows misting up.

HEATED REAR WINDSCREEN AND DOOR MIRRORS DEMISTING/DEFROSTING

(for versions/markets where provided)

Press button E to activate this function. The LED on the button comes on to indicate activation.

Press button E again to disable the function.

WARNING Do not apply stickers to the inside of the heated rear windscreen over the heating filaments to avoid damage that might cause it to stop working properly.

MANUAL CLIMATE CONTROL (for versions/markets where provided)

CONTROLS fig. 43

A: air temperature adjustment knob (hot/cold air mixing)

B: fan activation knob

C: air distribution knob.

D: climate control compressor on/off button

E: internal air recirculation on/off button

F: heated rear windscreen on/off button (for versions/markets, where available)

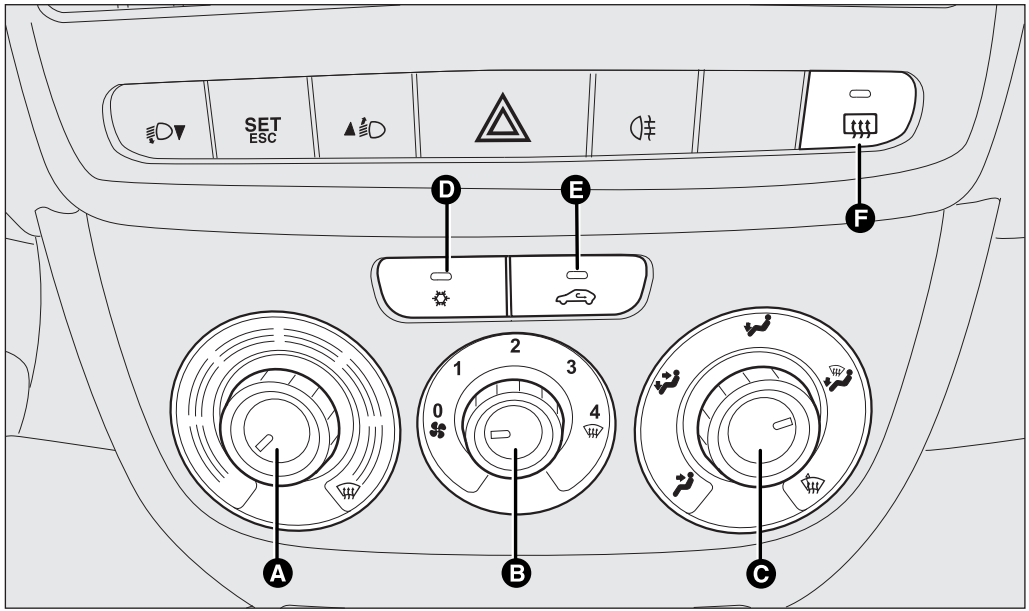

F0V0045m

fig. 43

PASSENGER COMPARTMENT HEATING

Proceed as follows:

- ❒ turn knob A to the red section;
- ❒ turn knob B to the required speed;
- ❒ turn knob C to:
- to warm the feet and, at the same time, demist the windscreen
- to warm the feet and keep the face cool (bi-level function)
- to warm the feet of those in the front and rear seats.
- ❒ to turn off internal air recirculation (button E LED off);

FAST FRONT DOOR WINDOW GLASSES DEMISTING/DEFROSTING

Proceed as follows:

- ❒ press button ❄;
- ❒ turn knob A fully to the right;
- ❒ turn knob B to ;
- ❒ turn knob C to ;
- ❒ turn off internal air recirculation (button E LED off).

Once the demisting/defrosting is complete, use the controls as normal to maintain optimum visibility.

Window demisting

In the event of considerable external moisture and/or rain and/or large differences in temperature inside and outside the passenger compartment, perform the following preventive window demisting procedure:

- ❒ press button ❄;
- ❒ turn off internal air recirculation (button E LED off);
- ❒ turn knob A to the red section;
- ❒ turn knob B to the second speed level;
- ❒ turn knob C to or to if there is no sign of the windows steaming up.

The climate control system is very useful for demisting the windows more quickly: just carry out the above procedure and activate the system by pressing ❄.

HEATED REAR WINDSCREEN AND DOOR MIRRORS DEMISTING/DEFROSTING

(for versions/markets where provided)

Press button F to activate; when this function is on, the LED on button F lights up.

This function is timed and will turn off automatically after 20 minutes. Press button F again to switch it off before 20 minutes elapse.

WARNING Do not apply stickers to the inside of the heated rear windscreen over the heating filaments to avoid damage that might cause it to stop working properly.

REGULATING THE FAN SPEED

To ventilate the passenger compartment properly, proceed as follows:

- ❒ fully open the central and side air diffusers;
- ❒ turn knob A to the blue section;
- ❒ turn knob B to the required speed;
- ❒ turn knob C to ;
- ❒ turn off internal air recirculation (button E LED off).

INTERNAL AIR RECIRCULATION ACTIVATION

Press button E: when the function is on, the button LED lights up.

It is advisable to switch the internal air recirculation on while standing in queues or in tunnels to prevent the introduction of polluted air. Do not use the function for a long time, particularly if there are many passengers on board, to prevent the windows from misting up.

WARNING The air recirculation system makes it possible to reach the required heating or cooling conditions faster. It is not advisable to switch the air recirculation on when it is rainy/cold or the windows might steam up, especially if the climate control system is not turned on.

CLIMATE CONTROL (cooling)

Proceed as follows:

- ❒ turn knob A to the blue section;
- ❒ turn knob B to the required speed;
- ❒ turn knob C to ;
- ❒ press buttons ❄ and E (button LEDs on).

Adjusting cooling

Proceed as follows:

- ❒ turn off internal air recirculation by pressing button E (button LED off);
- ❒ turn knob A to the right to increase the temperature;
- ❒ turn knob B to the left to reduce the fan speed.

SUPPLEMENTARY HEATER

(for versions/markets where provided)

This device warms up the passenger compartment more quickly when it is very cold and the engine coolant temperature is low.

The supplementary heater comes on automatically when the engine is started, if knob A is turned to the last red sector and the fan (knob B) is at least at the first speed level.

The supplementary heater turns off automatically after reaching the required comfort conditions.

WARNING The heater will not turn on if the battery voltage is too low.

SYSTEM MAINTENANCE

Run the climate control system for at least 10 minutes every month during the winter. Have the system inspected at the Fiat Service Network before the summer.

AUTOMATIC CLIMATE CONTROL
(for versions/markets, where provided)

GENERAL INFORMATION

The automatic climate control system adjusts the temperature, the quantity and the distribution of the air in the passenger compartment. The temperature control is based on the "equivalent temperature": in other words, the system continuously works to keep the comfort level inside the vehicle constant and to compensate for possible variations in outside conditions, including the solar radiation detected by a dedicated sensor. The automatically controlled parameters and functions are:

- ❒ air temperature at the vents;
- ❒ air distribution at the vents;
- ❒ fan speed (continuous air flow variation);
- ❒ compressor activation (to cool/dehumidify the air);
- ❒ air recirculation.

All functions may be changed manually. In other words, you may select one or more functions and change the parameters as required. Automatic control of the manually changed functions will be deactivated: the system will only override your settings for safety related reasons (e.g. risk of misting up).

Manual selections will always take priority over automatic settings and will be stored until the user switches the system back to automatic operation by pressing the AUTO button again, except for when the system intervenes for particular safety-related reasons. You can adjust one function manually without affecting the automatic control of the others.

The temperature of the air introduced is always controlled automatically, depending on the temperature set in the display (except when the system is off or in certain conditions when the compressor is switched off).

The system allows the following parameters and functions to be set or altered manually: air temperature, fan speed (continuous variation); air distribution in seven positions; compressor enablement; fast defrosting/demisting function; air recirculation; switching off the system.

CONTROLS fig. 44

A AUTO button for automatic control of all functions.
B Air distribution selection button.
C Display.
D MAX DEF function control button.
E System off button.
F Compressor enabling/disabling button.
G Air recirculation control button.
H Fan speed increase/decrease control buttons.
I Temperature increase/decrease control knob.
L Heated rear windscreen and electric door mirror on/off button (for versions/markets where provided).

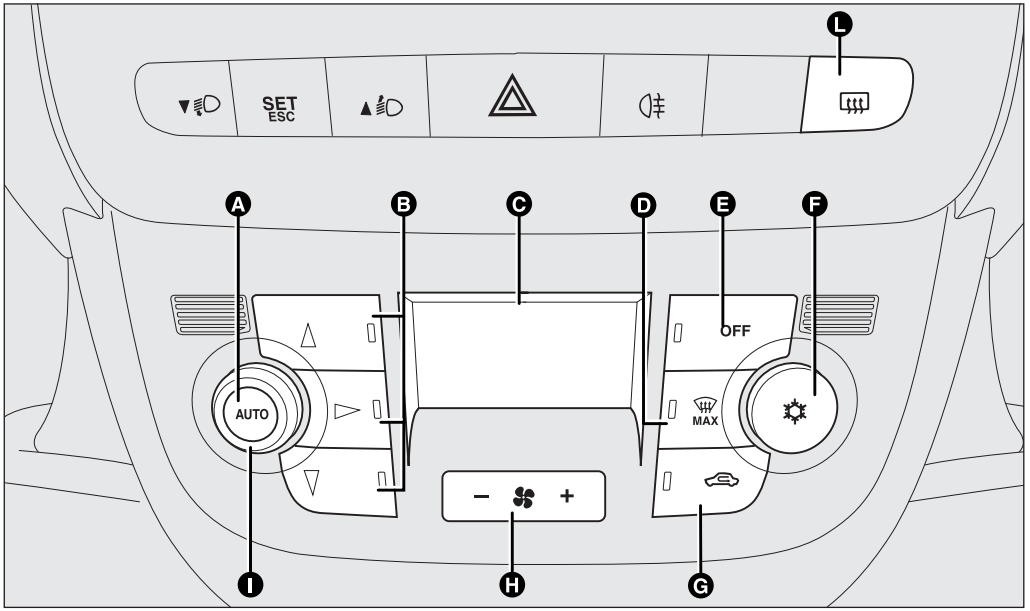

F0V0121m

fig. 44

USING THE CLIMATE CONTROL SYSTEM

The system can be started in different ways, but it is advisable to start by pressing the AUTO button and then turning the knob to set the temperature required on the display. The system will start running automatically in this way and the set temperature will be reached as quickly as possible. The system will adjust the temperature, the quantity and the distribution of the air introduced into the passenger compartment and will manage the recirculation function and the air conditioning compressor engagement. During fully automatic operation the only manual intervention required is the possible activation of the following functions:

- ❒ air recirculation, to keep it always on or off;
- ❒ MAX to speed up demisting/defrosting of the front door window glasses, rear door window glasses and door mirrors.

During fully automatic system operation, you can change the set temperatures, air distribution and fan speed at any time by using the relevant buttons or knobs: the system will automatically change its settings to adjust to the new requirements.

During fully automatic operation (FULL AUTO), the word FULL will disappear if the air distribution and/or flow rate and/or activation of the compressor and/or recirculation settings are changed. In this way, the functions will switch from automatic to manual control until the AUTO button is pressed again. With one or more functions turned on manually, the adjustment of the intake air temperature continues to be managed automatically, except with the compressor switched off: if this is the case, the temperature of the air introduced into the passenger compartment cannot be lower than that of the outside air.

CONTROLS

Air temperature adjustment knob (I)

Turn the knob either clockwise or anticlockwise to increase or lower the temperature in the passenger compartment.

The temperature set is shown on the display.

Turn the knob either all to the right or all to the left to the extreme HI or LO position to turn the maximum heating or maximum cooling functions on:

❒ HI Function (maximum heating):

select by turning the temperature knob clockwise over the maximum value (32 °C).

This function may be used to heat up the passenger compartment exploiting the system potential to the maximum. In this condition, the system stops controlling the temperature automatically and sets the air mixing to maximum heating. The air speed and distribution are fixed.

In particular, if the heating fluid is not sufficiently hot, the maximum fan speed does not come on straight away in order to limit the intake of insufficiently hot air into the passenger compartment.

All manual settings will be allowed when this function is on.

To switch the function off, simply turn the temperature knob anticlockwise and set the required temperature.

❒ LO function (maximum cooling):

select by turning the temperature knob anticlockwise under the minimum value (16 °C).

This function may be used to cool down the passenger compartment exploiting the system potential to the maximum. In this condition, the system stops controlling the temperature automatically and sets the air mixing to maximum cooling. The air speed and distribution are fixed. All manual settings will be allowed when this function is on.

To switch the function off, simply turn the temperature knob clockwise and set the required temperature.

Air distribution buttons (B)

By pressing these buttons, it is possible to set one of the seven possible air distributions manually:

▲ Air flow to the windscreen and front side window diffusers to demist or defrost them.

▶ Air flow to the centre and side dashboard diffusers to ventilate the chest and the face during the hot season.

▼ Air flow to the front and rear footwell diffusers. Thanks to the natural tendency of hot air to rise upwards, this distribution pattern allows the passenger compartment to warm up as quickly as possible, providing an immediate feeling of warmth.

▶ ▼ Air flow distribution split between footwell diffusers (hotter air) and central and side dashboard vents (cooler air). This distribution mode is particularly useful in spring and autumn on sunny days.

▲ ▼ Air flow distribution split between the footwell diffusers and the windscreen and front side windows defrosting/demisting diffusers. This allows an adequate warming of the passenger compartment and prevents the windows from steaming up.

The distribution set is shown by the corresponding LEDs in the selected buttons coming on.

To restore automatic control of the air distribution after a manual selection, press the AUTO button.

Fan speed adjustment buttons (H)

Press the outsides of button H to increase or decrease the fan speed and therefore the amount of air admitted into the passenger compartment, although maintaining the target temperature.

The fan speed is shown by the bars lit up on the display:

❒ Max. fan speed = all bars lit

❒ Min. fan speed = one bar lit.

The fan can only be disabled if the climate control compressor has been switched off by pressing button F-fig. 42.

WARNING To restore automatic fan speed control after a manual adjustment, press the AUTO button.

WARNING At high vehicle speeds, the dynamic effect may increase the air flow rate into the passenger compartment, which in this case will not directly correspond to the fan speed bar display.

AUTO button (A)
(automatic operation)

Press AUTO to make the system automatically adjust the quantity and distribution of the air introduced into the passenger compartment. All previous manual settings will be cancelled.

The message FULL AUTO appears on the front display.

By manually adjusting at least one of the functions automatically managed by the system (air recirculation, air distribution, fan speed or air conditioning compressor on/off), the word FULL will disappear from the display, indicating that the system is no longer automatically controlling all the functions (the temperature will still be controlled automatically by the system).

WARNING Should the system (after manual intervention) no longer be able to guarantee the target temperature for the passenger compartment, the set temperature value will start flashing to indicate the difficulties the system is experiencing and then the word AUTO will go out.

To restore system automatic control at any time, after one or more manual adjustments, press the AUTO button.

Air recirculation on/off button (G)

The air recirculation works according to the following operating logic:

- override on (air recirculation always on), indicated by the LED on the button G coming on and the symbol on the display;
- override off (air recirculation always off and introduction of outside air), indicated by the fact that the LED in the button goes off and symbol will appear on the display.

These operating conditions are obtained by pressing air recirculation button G in sequence.

WARNING The engagement of the air recirculation system makes it possible to reach the required heating or cooling conditions faster.

It is however not advised to use it on rainy/cold days as it would considerably increase the possibility of the windows steaming up, especially if the climate control compressor is off.

The recirculation is forced off (i.e. air is introduced from the outside) when the the outside temperature is cold to prevent misting up.

It is advisable not to use the air recirculation function when the outside temperature is low, because the windows could rapidly steam up.

Climate control compressor on/off button (F)

Press button to switch the climate control compressor off (if it is already on). The icon on the display will go out.

Press the button when the LED is off to automatically restore system control and use of the compressor. The icon will light up in the display in this case.

The system will switch the recirculation off when the climate control compressor is switched off to prevent the windows misting up. Although the system is capable of maintaining the required temperature, the word FULL will disappear from the display. If the system is no longer able to maintain the temperature, the figures will flash and the word AUTO will go out.

IMPORTANT With the compressor off, it is not possible to introduce air into the passenger compartment at a temperature lower than that of the outside air. In certain weather conditions, the windows could mist up rapidly due to the non-dehumidified air.

The switching off of the compressor remains memorised even when the engine has been stopped.

To restore automatic compressor engagement control, press the ✲ button again (in this case, the system will work only as a heater) or press the AUTO button.

With the compressor switched off, if the outside temperature is higher than the one set, the system is not capable of satisfying this request and signals it by the digits for the temperature setting flashing after which the word AUTO goes out.

With the climate control compressor off, the fan speed can be set to zero manually (no bar shown).

With the compressor enabled and the engine started, the fan speed may only be reduced to the minimum setting (one bar shown).

Button for rapid window demisting/defrosting (D)

Press this button and the climate control system will automatically switch on all the functions required for fast windscreen and side window demisting/defrosting:

- ❒ the climate control compressor is turned on when weather conditions are suitable;
- ❒ the air recirculation is turned off;
- ❒ the maximum air temperature for the HI air is set in both areas;
- ❒ sets the fan speed set according to the engine coolant temperature to limit the flow of air that is insufficiently warm to demist the windows;
- ❒ the air flow is directed to the windscreen and front door window glasses diffusers;
- ❒ switches on the heated rear windscreen

WARNING The rapid demisting/defrosting function for the windows remains on for about 3 minutes from when the engine coolant reaches the appropriate temperature for a rapid demisting of the windows.

When this function is active, the LED in the corresponding button and the one for the heated rear windscreen button switch on. The message FULL AUTO goes off on the display.

You can only adjust the fan speed and switch the heated rear windscreen off manually when this function is active.

To restore the previous operating conditions, simply press button B, air recirculation button G, compressor button F or AUTO button A.

Heated rear windscreen and electric door mirrors demisting/defrosting button (L)
(for versions/markets where provided)

Push this button to activate the demisting/defrosting of the heated rear windscreen and electrically controlled door mirrors

When this function is active, the button LED is on.

This function switches off automatically after about 20 minutes or when you push the button again, or when the engine is turned off. It will not be switched on automatically when the engine is restarted.

WARNING Do not apply stickers over the electric filaments on the inside of the heated rear window to prevent damage that might stop it working properly.

Switching the system OFF (E)

Press button E to switch the climate control system off. The display goes off.

With the system off, the following climate control system conditions are in place: display off, set temperature not displayed, air recirculation on to insulate the passenger compartment (recirculation LED on), climate control compressor off, fan off. Press the AUTO button to switch the climate control system back on in fully automatic mode.

EXTERIOR LIGHTS

The left lever fig. 45 includes the controls for the exterior lights. The exterior lights can only be switched on when the ignition key is in MAR. The instrument panel and the various controls on the dashboard will be lit up when the exterior lights are switched on.

DAYTIME RUNNING LIGHTS (DRL) fig. 45

(for versions/markets where provided)

With the ignition key turned to MAR and the twist switch turned to position **O** the daytime running lights are automatically activated; the other lights and interior lighting remain off. The automatic operation of the daytime running lights can be activated/deactivated via the display menu (see "Digital/multifunction display" in this section). If the daytime running lights are deactivated, no light comes on when the twist switch is turned to **O**.

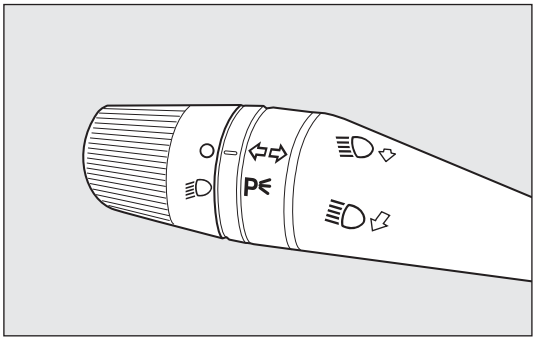

F0V0052m

fig. 45

WARNING

The daytime running lights are an alternative to the dipped headlamps for driving during the daytime in countries where it is compulsory to have lights on during the day, and they are also permitted in those countries where this not obligatory. Daytime running lights cannot replace dipped headlamps when driving at night or through tunnels. The use of daytime running lights is governed by the highway code of the country in which you are driving. Keep to the rules.

DIPPED HEADLAMPS/SIDE LIGHTS fig. 45

With the ignition key turned to MAR, turn the twist switch to ≡D. If dipped headlamps are activated, the daytime lights go out and the side lights and dipped headlamps come on. The warning light ≡D in the instrument panel comes on. When the ignition key is turned to STOP or removed and the twist switch is turned from **O** to ≡D, all the side lights and number plate lights come on. The warning light ≡D in the instrument panel comes on.

MAIN BEAM HEADLAMPS fig. 45

With the twist switch at position ≡D, push the lever forwards toward the dashboard (stable position). The warning light ≡D in the instrument panel will come on. They switch off when the lever is pulled towards the wheel (dipped headlamps come back on).

FLASHING fig. 45

You can flash the headlights by pulling the lever towards the wheel (temporary position). The warning light ≡D in the instrument panel will come on.

DIRECTION INDICATORS fig. 46

Place the lever in the (stable) position:

❒ up (position 1): activation of right direction indicator;

❒ down (position 2): activation of left direction indicator.

The ⇨ or ⇦ warning lights will come on intermittently in the instrument panel.

Direction indicators switch off automatically when the vehicle is back in a straight line.

If you want the indicator to flash briefly to show that you are about to change lane, move the lever up or down without it clicking into position. When released, the lever will return to its default position.

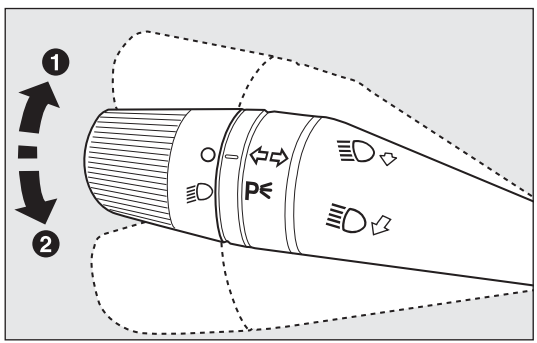

FV0053m

fig. 46

Lane change function

If you wish to signal a lane change, put the left lever in the temporary position for less than half a second. The direction indicator on the side selected will flash five times and then go out automatically.

"FOLLOW ME HOME" DEVICE

This device lights up the space in front of the vehicle for a short time.

Activation

With the ignition key in the STOP position or extracted, pull the lever towards the steering wheel and move it within 2 minutes of the engine switching off.

Each time the lever is moved, the lights stay on for an extra 30 seconds up to a maximum of 210 seconds; then the lights are switched off automatically.

Each time the lever is moved, warning light 3 on the instrument panel comes on and the corresponding message will appear on the display (see "Warning lights and messages") for as long as the function remains on. The warning light comes on when the lever is operated and stays on until the function is automatically deactivated. Each movement of the lever only increases the amount of time the lights stay on.

Deactivation

Keep the lever pulled towards the steering wheel for more than two seconds.

WINDOW CLEANING

The right lever fig. 47 controls windscreen wiper/washer and heated rear window wiper/washer operation (for versions/markets where provided).

WINDSCREEN WIPER/WASHER

This operates only with the ignition key turned to MAR.

The right lever can assume four different positions:

- **O** windscreen wiper off.
- intermittent operation.
- continuous slow operation.
- continuous fast operation.

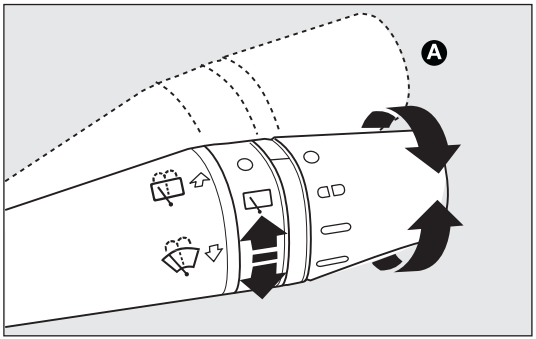

F0V0054m

fig. 47

Move the lever to position A-fig. 47 (temporary position) to limit operation to the time for which the lever is held in this position. When released, the lever will return to its default position and the wiper will be automatically stopped. With the twist switch at , the windscreen wiper will automatically adapt to the speed of the vehicle.

With the windscreen wipers working, the rear window wiper is automatically activated when reverse gear is engaged.

Do not use the windscreen wipers to remove layers of snow or ice from the windscreen. In such conditions, the windscreen wipers may be subjected to excessive stress and the motor protection which prevents operation for a few seconds may trip. If the issue persists, contact the Fiat Service Network.

"Smart washing" function

Pull the lever towards the steering wheel (temporary position) to operate the screen washer jet. Keeping the lever pulled for more than half a second, with just one movement it is possible to operate the washer jet and the wiper at the same time. The wiper stops working three strokes after releasing the lever.

A further stroke after approximately six seconds completes the wiping cycle.

REAR WINDOW WIPER/WASHER

(for versions/markets where provided)

This operates only with the ignition key turned to MAR.

Activation

Turn the twist switch to ⌔ to operate the rear window wiper:

- ❒ in intermittent mode if the windscreen wiper is off;
- ❒ synchronised operation (but with half-stroke frequency) when the windscreen wiper is on;
- ❒ continuous operation with reverse engaged and function on.

With the windscreen wiper on and reverse gear engaged, rear window wiping will be continuous.

Pushing the lever towards the dashboard (temporary position) will activate the rear window washer jet. Keeping the lever pushed for more than half a second will also activate the rear window wiper. Releasing the lever will activate the smart washing function, as described for the windscreen wiper.

Deactivation

The function stops when the lever is released.

Do not use the rear window wiper to remove layers of snow or ice. In such conditions, the wiper may be subjected to excessive stress and the motor protection, which prevents operation for a few seconds, may intervene. If the issue persists, contact the Fiat Service Network.

HEADLIGHT WASHERS

(for versions/markets where provided)

They are activated when the dipped headlamps are on and the screen washer is activated.

WARNING Check jet function and cleanliness at regular intervals.

The headlamp washer jet does not function when the level of fluid in the reservoir falls below 1.6 litres.

CRUISE CONTROL

(for versions/markets where provided)

This is an electronic driving aid that allows you to drive at a speed of above 30 km/h on long and straight dry roads with few driving changes (e.g. motorways) at a preset speed without having to press the accelerator pedal. Therefore it is not recommended to use this device on extra-urban roads with traffic. Do not use it in town.

Switching the device on

Turn the twist switch A - fig. 48 to ON.

When the device is activated, the warning light comes on together with the relevant message in the instrument panel (for versions/markets where provided).

The speed adjustment function cannot be activated in 1st or reverse gear; it is advisable to activate the function in 4th or higher gears.

When travelling downhill with the device activated, the vehicle speed may exceed the memorised one.

Memorizing vehicle speed

Proceed as follows:

- ❒ turn twist switch A-fig. 48 to ON and depress the accelerator pedal until the vehicle reaches the required speed;
- ❒ move the stalk upwards (+) for at least one second, then release it. The vehicle speed is now memorised and you can therefore release the accelerator pedal.

If necessary (when overtaking for instance) acceleration is possible by simply pressing the accelerator pedal: releasing the accelerator pedal, the vehicle will return to the speed memorised previously.

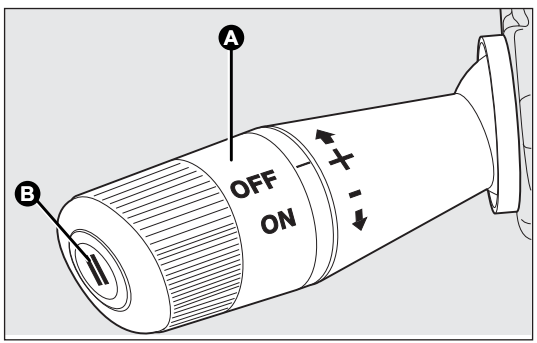

F0V0092m

fig. 48

Restoring the memorized speed

If the device has been switched off, for example by pressing the brake or clutch pedal, the memorized speed can be restored as follows:

- ❒ accelerate gradually until reaching a speed approaching the memorised speed;
- ❒ engage the gear selected at the time of speed memorizing;
- ❒ press button B-fig. 48.

Increasing the memorized speed

This can be done in two ways:

- ❒ by pressing the accelerator and then memorizing the new speed reached;

or

- ❒ by moving the lever upwards (+).

Each operation of the lever will correspond to a slight increase in speed of about 1 km/h, while keeping the lever upwards will correspond to a continuous speed increase.

Reducing the memorized speed

This can be done in two ways:

- ❒ by turning the device off and then memorizing a new speed;

or

- ❒ by moving the lever downwards (–) until reaching the new speed, which will be memorized automatically.

Each movement of the lever will correspond to a slight reduction in speed of about 1 km/h, while keeping the lever held downwards will correspond to a continuous speed reduction.

Switching the device off

The device can be switched off by the driver in the following ways:

- ❒ turning the twist switch A to the OFF position;
- ❒ switching off the engine.

Deactivating the function

The device can be de-activated by the driver in the following ways:

- ❒ pressing the brake pedal when the device is adjusting the speed;
- ❒ pressing the clutch pedal when the device is adjusting the speed;
- ❒ pressing the button B – fig. 48 when the device is adjusting the speed (for versions/markets, where provided);
- ❒ pressing the accelerator pedal; in this case, the system is not really de-activated but the request for acceleration takes priority. The cruise control is, however, active and you do not need to press button B - fig. 48 to restore the previous conditions after accelerating.

The device turns off automatically in the following cases:

- ❒ if the ABS or ESC systems cut in;
- ❒ with vehicle speed below the set limit;
- ❒ if there is a system failure.

WARNING

While travelling with the device engaged, do not put the gear lever into neutral.

WARNING

In case of malfunctioning or if the device fails, turn twist switch A to OFF and contact the Fiat Service Network.

COURTESY LIGHTS

FRONT COURTESY LIGHT WITH MOVABLE LENS

The light fades up or reaches full brightness immediately if pushed at the sides.

On the Doblò Cargo versions, it is only connected to the front doors.

On the Doblò/Doblò Combi people carrier versions, it is connected to the front doors and the sliding side doors.

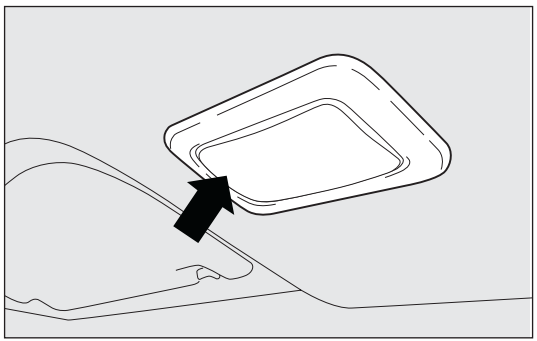

F0V0055m

fig. 49

FRONT COURTESY LIGHT WITH SPOT LIGHTS fig. 50

(for versions/markets where provided)

On the Doblò Cargo versions, it is only connected to the front doors.

On the Doblò/Doblò Combi people carrier versions, it is connected to the front doors and the sliding side doors.

Switch A switches the courtesy lights on/off. With switch A in the middle position, lights C and D go on/off when the doors are opened/closed.

With switch A pressed to the left, lights C and D are always off.

With switch A pressed to the right, lights C and D are always on.

The lights switch on/off progressively.

Switch B controls the spot light function; when the courtesy light is off, it switches on individually:

- ❒ light C if pressed on the left side;
- ❒ light D if pressed on the right side.

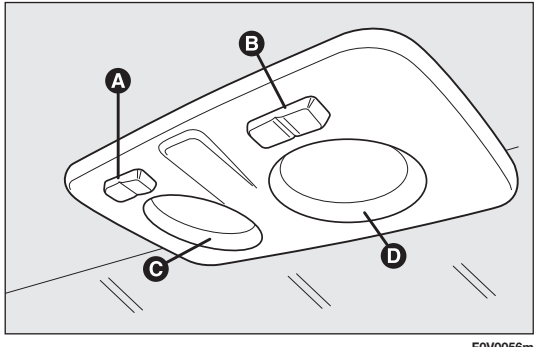

F0V0056m

fig. 50

WARNING Before getting out of the vehicle, make sure both switches are in the middle position; when the doors are closed, the lights switch off to prevent the battery from being run down. In any case, if the switch is left in the on position, the courtesy light switches off automatically 15 minutes after the engine is switched off.

REAR COURTESY LIGHT WITH MOVABLE LENS (Doblò/Doblò Combi versions)

The light comes on automatically when a front door or sliding side door is opened and goes out when it is closed.

Press the left side of the lens A-fig. 51, as shown in the diagram, to switch the light on/off when the doors are closed.

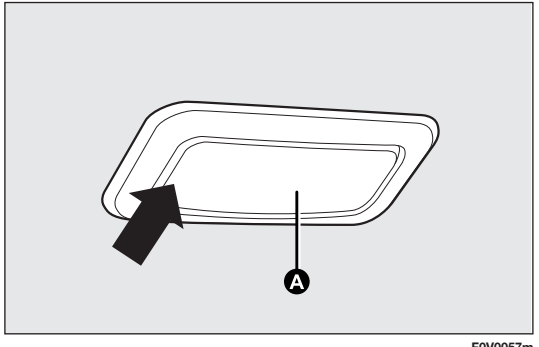

F0V0057m

fig. 51

REAR COURTESY LIGHT WITH MOVABLE LENS
(Cargo versions without fixed window)

This is located on the rear panel of the load compartment. The light comes on automatically when you open the sliding side doors (for versions/markets where provided) and the rear swing doors/tailgate (for versions/markets where provided), and goes out when you close them.

Press the left or right side of the movable lens A, as shown in fig. 52, to switch the light on/off when the doors are closed.

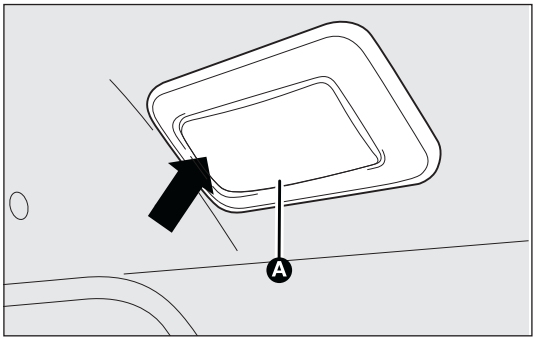

F0V0171m

fig. 52

REAR COURTESY LIGHT WITH MOVABLE LENS
(additional for Cargo long wheelbase versions)

It is located on the right side of the load compartment. The light comes on automatically when the sliding side doors and the rear swing door/tailgate are opened and it goes out when they are closed.

Press the left side of the lens A-fig. 52, as shown in the diagram, to switch the light on/off when the doors are closed.

LUGGAGE COMPARTMENT COURTESY LIGHT
(Doblò/Doblò Combi version)

The light fig. 53 comes on automatically when the swing doors or tailgate (for versions/markets where provided) are opened and goes out when they are closed.

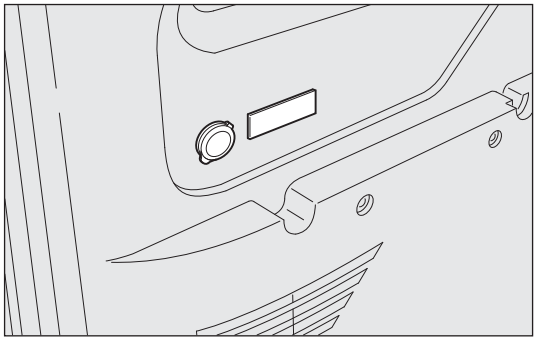

F0V0172m

fig. 53

REAR COURTESY LIGHT WITH REMOVABLE TORCH
(for Cargo versions where provided)

The removable roof light is not connected to the doors , it switches on/off only manually pressing switch A-fig. 54, with key on MAR-ON.

Switch A can assume three different positions:

- ❒ with the switch in the middle, the light is always off;
- ❒ with the switch pushed up (position 1), the light is always on;
- ❒ with the switch pushed down (position 2 – AUTO OFF), the light is always off.

For Cargo versions with fixed window

The light comes on automatically when you open the sliding side doors and the rear swing doors/tailgate; then, it goes out when you close them.

To switch the light on/off when the doors are closed press the switch A-fig.54.

Switch A can have three different positions:

- ❒ with the switch in central position the light comes on when a rear door is opened;
- ❒ with the switch pushed up (position 1), the light is always on;
- ❒ with the switch pushed down (position 2 - AUTO OFF), the light is always off.

TORCH FUNCTION
(for Cargo versions where provided)

This is located on the right side of the load compartment. It has a removable electric torch.

To use the removable torch A-fig. 55, push button B and remove the torch in the direction shown by the arrow. Then press switch C to switch the light on/off.

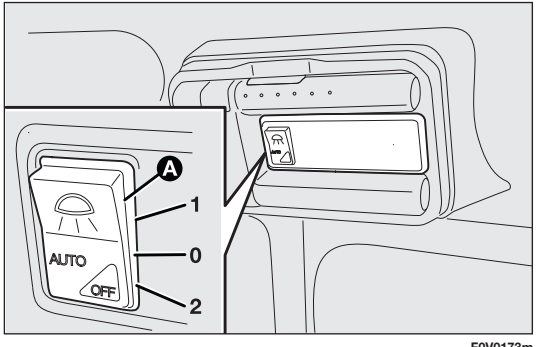

F0V0173m

fig. 54

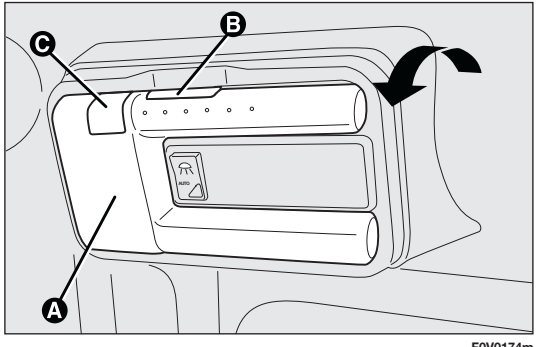

F0V0174m

fig. 55

When the removable courtesy light is secured to its fixed support, the electric torch battery is automatically recharged.

For Cargo versions with fixed window

With the vehicle stationary and the ignition key either turned to STOP or removed, the courtesy light is recharged for a maximum of 15 minutes.

SWITCHING COURTESY LIGHTS ON/OFF

Cargo versions

Switching on

The front courtesy light comes on when one of the two front doors is opened and remains on for 3 minutes if at least one of the two doors continues to remain open.

The rear courtesy lights come on when one of the sliding side doors or the rear door (swing or tailgate) is opened and they stay on for 3 minutes if at least one of these doors remains open.

Switching off

The front courtesy light goes out immediately (with fading), if the key is in the MAR position when all the front doors are closed.

The front courtesy light goes out after 10 secs. (with fading), if the key is in the OFF position when all the front doors are closed.

The rear courtesy lights go out immediately (with fading), if the key is in the MAR position when all the side doors and the rear door (swing or tailgate) are closed.

The rear courtesy lights go out after 10 secs. (with fading), if the key is in the OFF position when all the side doors and the rear door (swing or tailgate) are closed.

Doblò/Doblò Combi versions

Switching on

The front and rear courtesy lights come on when one of the front doors or a sliding side door is opened and they stay on for 3 minutes if at least one of these doors continues to remain open.

Switching off

The front and rear courtesy lights go out immediately (with fading), if the key is in the MAR position when all the front doors and the sliding side doors are closed.

The front and rear courtesy lights go out after 10 secs. (with fading), if the key is in the OFF position when all the front doors and the sliding side doors are closed.

CONTROLS

HAZARD WARNING LIGHTS

They are turned on by pressing switch A-fig. 56, regardless of the ignition key position. With the device on, warning lights ⇦ and ⇨ light up in the instrument panel. Press switch A again to turn the lights off.

WARNING The use of hazard warning lights is governed by the highway code of the country you are in. Keep to the rules.

Emergency braking
(for versions/markets where provided)

During emergency braking, the hazard warning lights come on automatically and warning lights ⇦ and ⇨ light up in the panel at the same time. They go out automatically as soon as the emergency braking is over. This function complies with the relevant legal regulations currently in force.

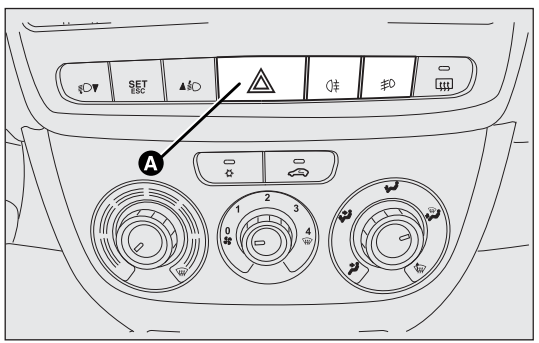

fig. 56

FRONT FOG LIGHTS fig. 56
(for versions/markets where provided)

Press button ≠D to switch them on. The warning light ≠D in the instrument panel will come on.

When the fog lights are on, the side lights also come on, while the daytime running lights go off irrespective of the position of the twist switch.

Press the button again to turn the lights off.

REAR FOG LAMPS fig. 56

Press button D≠ to switch them on when the dipped headlamps or front fog lamps are on. The warning light D≠ in the instrument panel will come on.

Press the button again to turn the lights off, or turn off the dipped headlamps and/or the front fog lamps (where provided).

FUEL CUT-OFF SYSTEM

This system triggers after a collision and activates the following:

- ❒ cut-off of fuel supply with consequent switching off of the engine;
- ❒ doors automatically unlocked;
- ❒ switching on of all interior lights.

When the system has been triggered, the message “Fuel cut off, see handbook” is displayed on some versions.

Check carefully for fuel leaks, for instance in the engine compartment, under the vehicle or near the tank area.

After a crash, turn the ignition key to STOP to avoid draining the battery.

The following procedure should be carried out to restore the correct operation of the vehicle:

- ❒ turn the ignition key to MAR;
- ❒ activate the right indicator;
- ❒ deactivate the right indicator;
- ❒ activate the left indicator;
- ❒ deactivate the left indicator;
- ❒ activate the right indicator;
- ❒ deactivate the right indicator;
- ❒ activate the left indicator;
- ❒ deactivate the left indicator;
- ❒ turn the ignition key to STOP.

WARNING

If, after a crash, you smell fuel or notice leaks from the fuel system, do not reactivate the system to avoid the risk of fire.

INTERIOR FITTINGS

DRIVER SIDE ARMREST fig. 57

(for versions/markets where provided)

On some versions, the driver's side front seat has an armrest.

Lift or lower the armrest as shown by the arrows.

STORAGE COMPARTMENT fig. 58

This is located in front of the passenger's side front seat.

GLOVE COMPARTMENT

To open the glove compartment, operate handle A-fig. 59.

Turn the key clockwise/anticlockwise to lock/unlock the glove compartment (for versions/markets where provided).

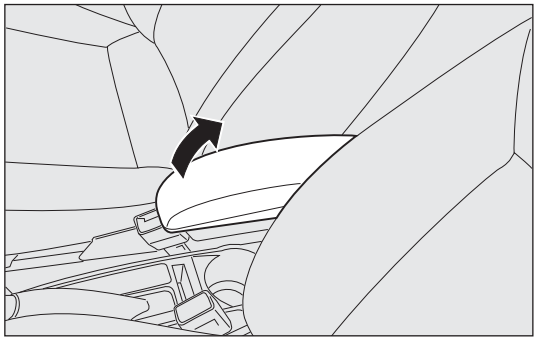

F0V0058m

fig. 57

WARNING

Never travel with the glove compartment open: it could injure the passenger in the event of a crash.

CURRENT SOCKET (12V)

It is located in the centre console (figs. 60-61, depending on the version) and only works with the ignition key in the MAR position.

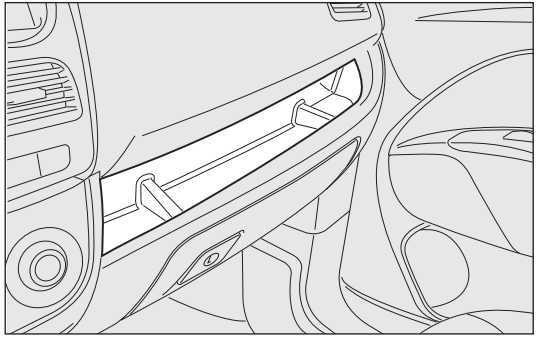

F0V0059m

fig. 58

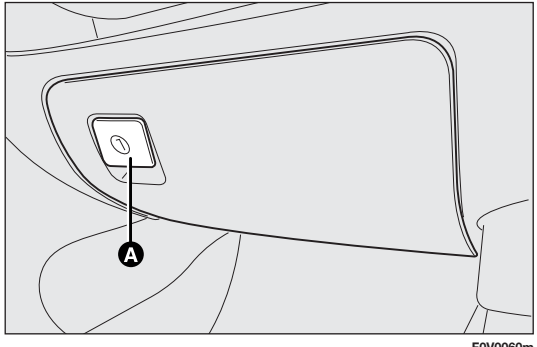

F0V0060m

fig. 59

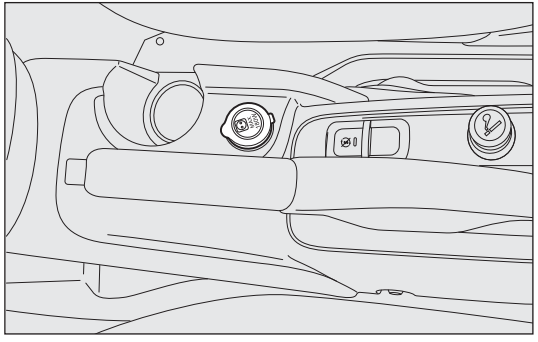

F0V0062m

fig. 60

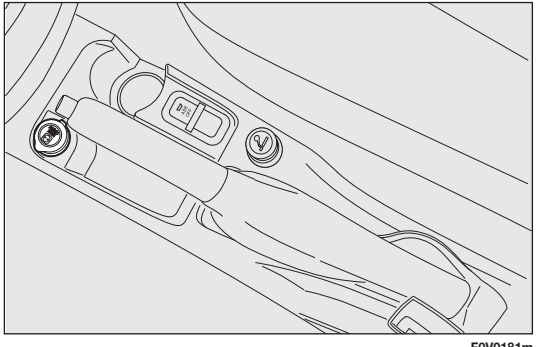

F0V0181m

fig. 61

On Cargo versions, depending on the trim level, there is a current socket inside the load compartment fig. 62 (short wheelbase Cargo) – fig. 63 (long wheelbase Cargo).

On Doblò/Doblò Combi versions (for versions/markets, where provided) there is a current socket in the luggage compartment fig. 64.

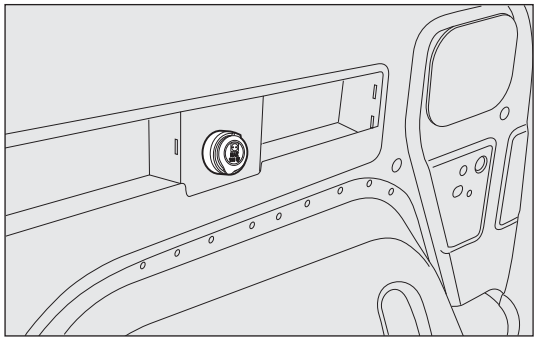

F0V0101m

fig. 62

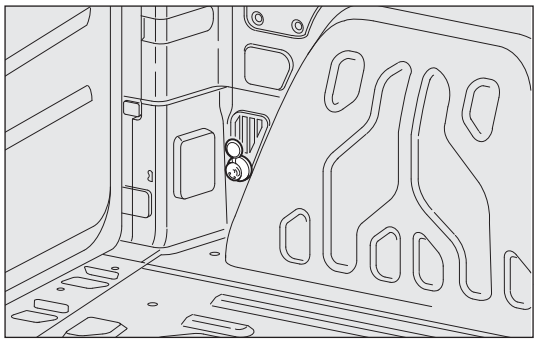

F0V0180m

fig. 63

SEAT WITH STORAGE COMPARTMENT (for Cargo versions, where provided)

Lift the tape A fig. 64b to access the storage compartment.

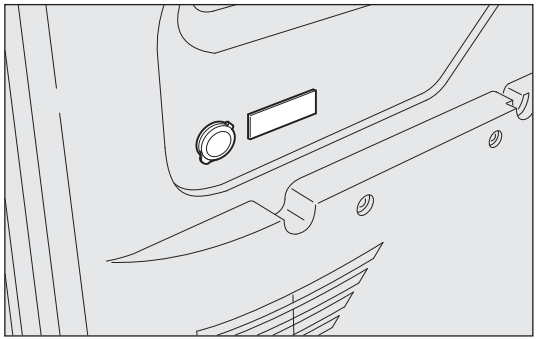

F0V0172m

fig. 64

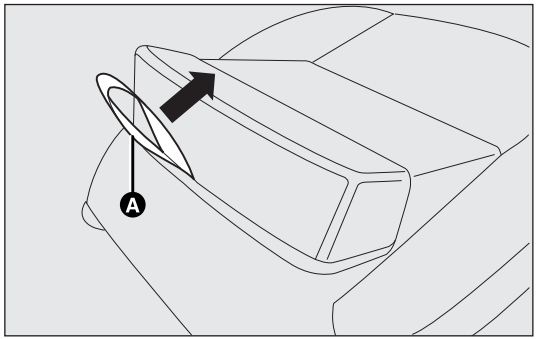

F0V0200m

fig. 64a

BRACKET FOR ODDMENTS COMPARTMENT IN CAB fig. 65

The compartment is fitted above the sun visors and is designed for quick and easy storage of light objects (e.g. documents, road maps etc.).

CIGARETTE LIGHTER

(for versions/markets where provided)

Press button A-fig. 66-67 (depending on the version) to switch on the cigarette lighter when the ignition key is turned to MAR.
After a few seconds the button goes back to its initial position and the cigarette lighter is ready for use.

WARNING Always check that the cigarette lighter has turned itself off.

WARNING

The cigarette lighter becomes very hot. Handle it carefully and make sure children don't touch it: risk of fire and/or burning.

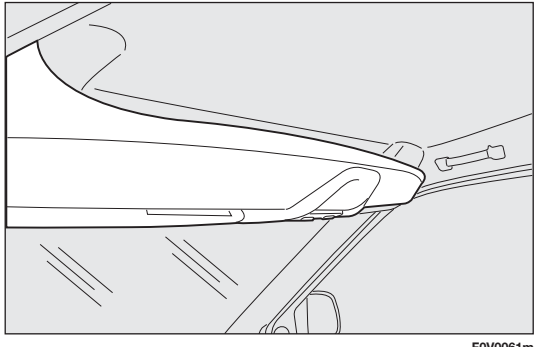

F0V0061m

fig. 65

ASHTRAY fig. 68

(for versions/markets where provided)

The ashtray is a removable spring-loaded plastic box that can be fitted into the cup/can holders in the central console.

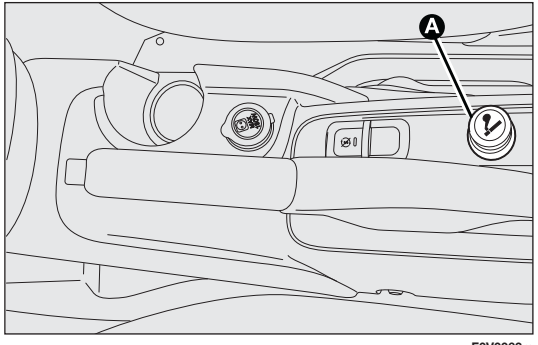

F0V0063m

fig. 66

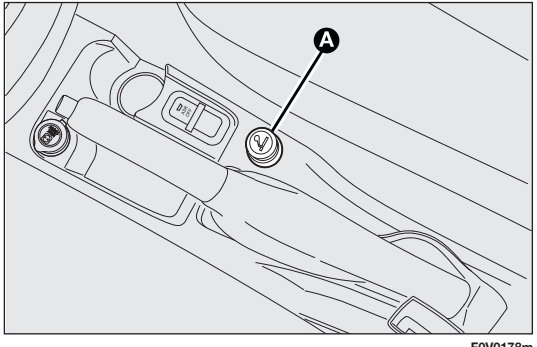

F0V0178m

fig. 67

WARNING

Do not use the ashtray as a waste paper basket: it might catch fire in contact with cigarette stubs.

SUN VISORS fig. 69

The driver's side and passenger's side sun visors can be moved back and forth and to the side.

There is a space for storing tickets behind the visor on the driver's side.

A vanity mirror is fitted on the passenger side sun visor on all versions.

SATELLITE NAVIGATOR CAPABILITY fig. 69a

(for versions/markets where provided)

This is located in the dashboard area illustrated in the diagram for connecting the navigator.

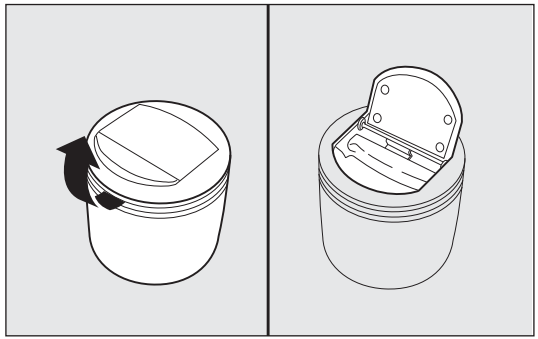

F0V0064m

fig. 68

Portable navigators to be fitted in the seat in figure 69a have a mechanical release device activated by pressing the two side buttons on the stem. The failed operation of the release may damage the seat of the navigator.

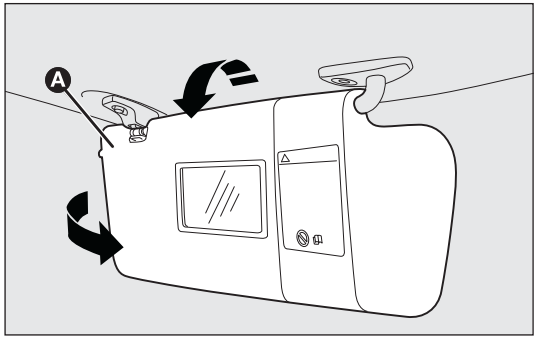

F0V0065m

fig. 69

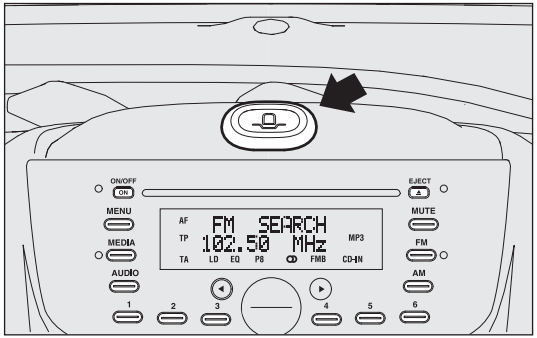

F0V0191m

fig. 69a

DOCUMENT-HOLDING CLIP

(for versions/markets where provided)

There is a document-holding clip in the middle of the dashboard above the sound system compartment; on some versions this component can be used as a bookrest, fig. 70.

For this kind of use:

❒ raise the bookrest from the back, operating as indicated by the arrow (detail A);

❒ lay it on the dashboard as shown (detail B).

WARNING If the socket for the portable navigator presetting is fitted, avoid any contact with the dashboard while opening.

❒ the bookrest is arranged for reading documents (detail B) in vertical position.

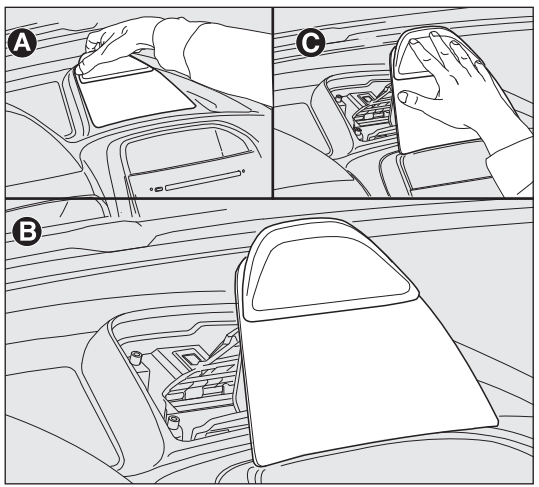

F0V0198m

fig. 70

WARNING

Do not use the bookrest in vertical position with the vehicle in motion.

To refit the bookrest in its housing:

❒ reverse the above movement with open hand till hearing the clicks of the front and rear fasteners (detail C).

HINGED REAR SIDE WINDOWS (Doblò/Doblò Combi versions) fig. 71

To open, proceed as follows:

❒ move lever A-fig. 71 outwards until the window is fully open.

❒ push the lever back until it locks into place.

To close them, carry out the process in reverse until the lever clicks back into its original place.

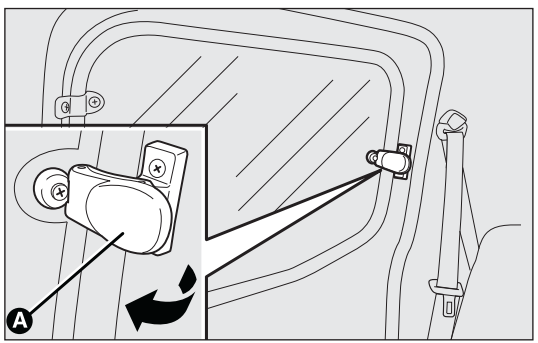

F0V0132m

fig. 71

DOORS

CENTRAL DOOR LOCKING/UNLOCKING SYSTEM

Door locking from the outside

The doors will only be locked if all doors are shut. If one or more of the doors is open after button is pressed on the remote control, the direction indicators will flash quickly for around three seconds. You can lock all the doors by turning the key clockwise in the driver's door. Pressing button on the remote control twice in quick succession activates the dead lock device (see "Dead lock").

Door unlocking from the outside

Press button shortly to remotely unlock only the front doors (Cargo version), to turn on the front roof light for a limited period and to double flash the direction indicators.

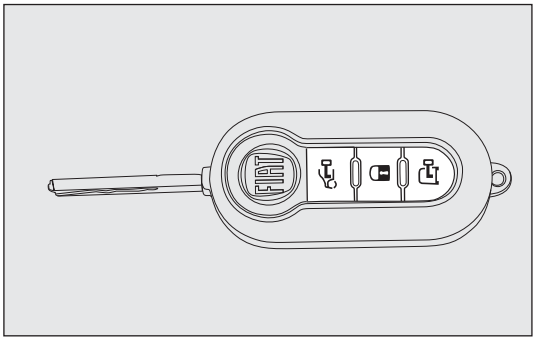

F0V0046m

fig. 72

Press button shortly to remotely unlock the load compartment (Cargo version), to turn on the rear roof lights for a limited period and to double flash the direction indicators. Turn the metal tang counterclockwise in the driver's door to unlock the front doors only.

Press button shortly to remotely unlock only the front doors (Cargo version), to turn on the front roof light for a limited period and to double flash the direction indicators. Press button shortly to remotely unlock the load compartment (Cargo version), to turn on the rear roof lights for a limited period and to double flash the direction indicators. Turn the metal tang counterclockwise in the driver's door to unlock the front doors only.

Unlocking the load compartment from inside the vehicle (Cargo version)

Press button A-fig. 73 (Cargo version) to unlock the load compartment (rear swing doors/tailgate and sliding side doors) from inside the vehicle. If the LED is on, the load compartment is locked.

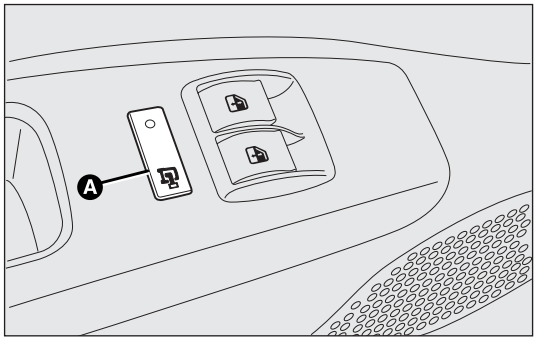

F0V0022m

fig. 73

SLIDING SIDE DOORS

(for versions/markets where provided)

WARNING

Before opening a door, check that you can do so safely.

Before refuelling, check that the left sliding side door is fully closed; if it is not, you could damage the door and the slide locking mechanism when the fuel cap is open.

WARNING

You must not open the left-hand sliding side door with the fuel cap open while refuelling. Check that the fuel cap is closed while opening/closing the sliding side door to avoid damage.

On Cargo versions, the sliding side door is fitted with a spring-loaded latch that stops the door from opening any further. To lock it, simply push the door as far as it will go; to unlock it, pull forward firmly.

In any case, make sure that the door is properly attached to the device which keeps it fully open.

WARNING

If you are parked on a slope, do not leave the sliding door locked in the open position. An involuntary impact could unhook the door, causing it to move.

WARNING

Before leaving the vehicle parked with the sliding doors open, always check that they are locked into place.

Opening/closing from outside

Opening: turn the key in the lock and pull the handle A-fig. 74 in the direction shown by the arrow, then slide the door towards the rear of the vehicle until it locks into place and can go no further.

Closing: grab the handle A-fig. 74 and push towards the front of the vehicle. Lock with the key.

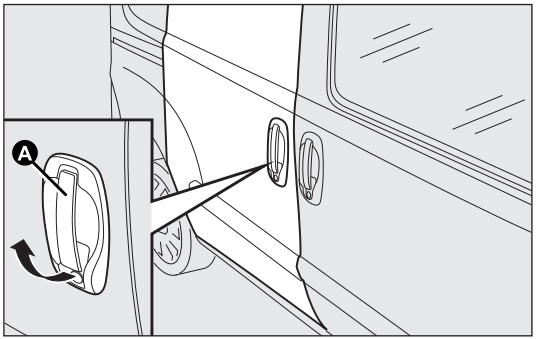

fig. 74

Opening/closing from the inside (Doblò/Doblò Combi versions)

Opening: push switch A-fig. 75 to unlock the door, then pull the handle and slide the door towards the rear of the vehicle until it can go no further.

Closing: push switch A-fig. 75 to release the door and then push it towards the front of the vehicle.

Push switch B-fig. 75 to lock the door from inside the vehicle.

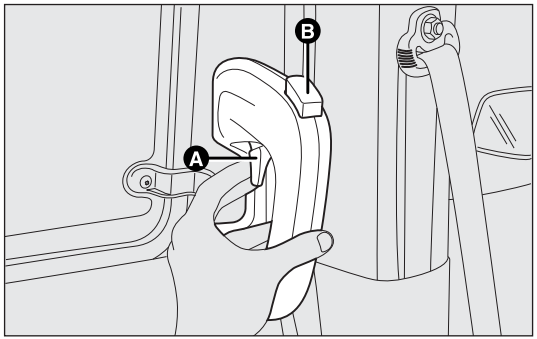

fig. 75

Opening/closing from the inside (Cargo versions)

Opening: pull lever A-fig. 76 and slide the door towards the rear of the vehicle until it can go no further.

Closing: slide the door towards the front of the vehicle.

CHILD LOCK SYSTEM fig. 77

This system prevents the sliding side doors being opened from the inside.

It can be engaged only with the sliding side door open:

- ❒ position 1 – engaged (door locked);
- ❒ position 2 – disengaged (door can be opened from inside).

The device remains engaged even if the doors are unlocked remotely.

WARNING

Always use this device when carrying children.

DOUBLE REAR SWING DOORS

The rear double swing doors are fitted with a link system that stops them when they have opened to an angle of approximately 90 degrees.

To open them wider to an angle of 180 degrees, push the locking device A-fig. 78 (one on each side) as shown in the diagram and simultaneously open the doors.

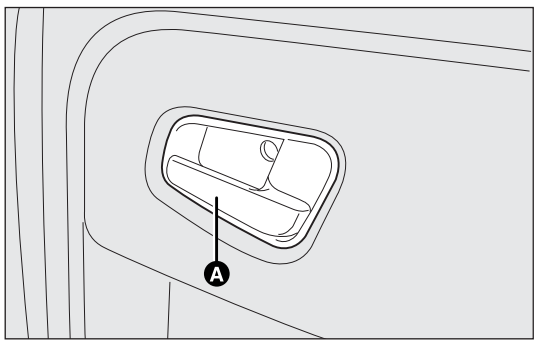

F0V0066m

fig. 76

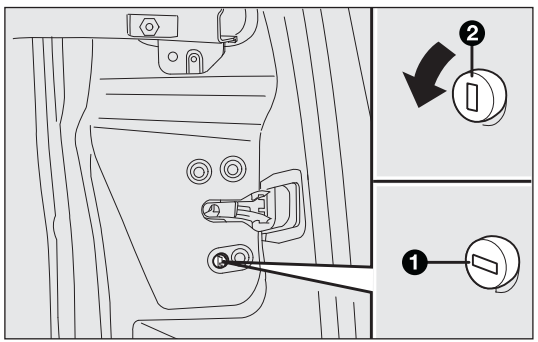

F0V0186m

fig. 77

Using the key pawl on the door, you can do the following:

- ❒ for Cargo versions with swing door/boot: centrally unlock the load compartment (sliding side doors + rear swing doors/tailgate), centrally lock all the doors;
- ❒ for Doblò/Doblò Combi versions with swing door: local unlocking/locking.

WARNING

The spring-loaded system was designed for optimum usage. Accidental knocks or a strong gust of wind may release the springs, forcing the doors to close.

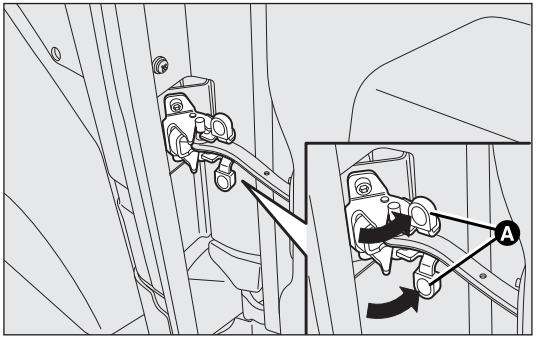

F0V0067m

fig. 78

Opening/closing the first swing door from the outside

To open the door, turn the key in the lock or press button on the remote control and then pull handle A-fig. 79 in the direction of the arrow. To close the door, turn the key in the lock or press button on the remote control.

WARNING

When closing, shut the right hand door fully before you close the left hand door. Never shut the two doors at the same time.

Emergency opening of the first swing door from the inside

From inside the vehicle, use device A-fig. 80.

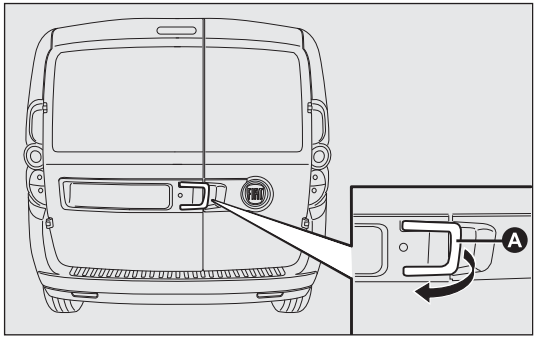

F0V0079m

fig. 79

Opening the second swing door

After having opened the first door, pull handle A-fig. 81 in the direction shown by the arrow.

WARNING Pull handle A-fig. 81 only in the direction shown in the diagram.

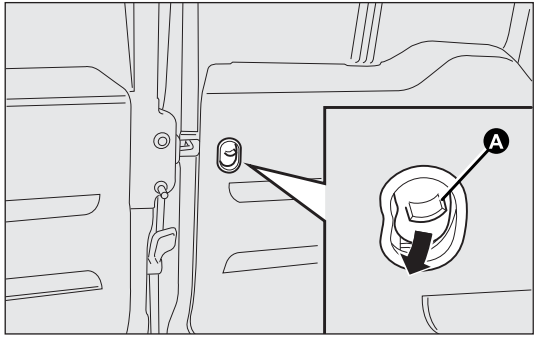

F0V0080m

fig. 80

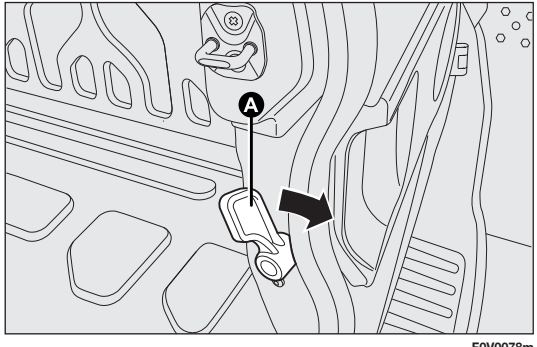

F0V0078m

fig. 81

FIXED WINDOW

Use of the fixed window fig. 81a:

- ❒ Open the swing doors;
- ❒ Pull lever A downwards in the direction indicated by the arrow, making sure to keep it lowered as long as the lock is over the crossmember;
- ❒ Open using both hands, making sure to aid the fixed window opening by using handle B;
- ❒ To close, pull the fixed window downwards using the suitable handle B.

WARNING the fixed window remains open up to a speed of 110 km/h.

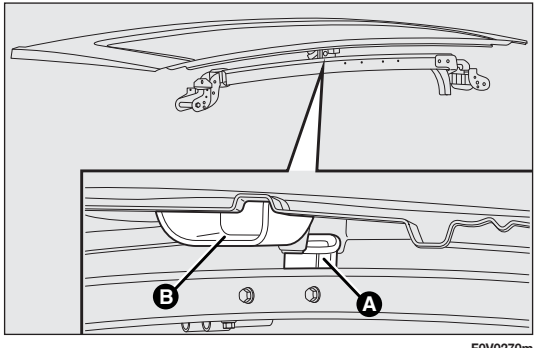

F0V0270m

fig. 81a

WINDOW OPENING MECHANISM

FRONT ELECTRIC WINDOWS

Buttons fig. 82 have been provided on the driver's door panel to control the following functions with the ignition key turned to MAR:

A: Opening/closing left window

B: Opening/closing right window

Push button A or B to open/close the appropriate window.

When one of the two buttons is pressed briefly, the window moves in stages; if the button is held down, continuous automatic operation is activated both for closing and opening. Press button A or B again to stop the window in its current position.

The window opening mechanism is fitted with a security system (where provided) that can detect the presence of an obstacle whilst the window is closing; when this happens, the system kicks in and the movement of the glass is immediately reversed.

WARNING In the event that the anti-crushing function is activated five times in less than a minute, the system will automatically enter "recovery" mode (self-protection). This condition is apparent from the window closing in stages.

On such occasions, it is necessary to carry out the system restore procedure, acting as follows:

❒ open the windows;

or

❒ turn the ignition key to STOP and then to MAR.

If no malfunction is present, the window returns to its normal operation automatically.

WARNING With the ignition key at STOP or removed, the window opening mechanism remains activated for about two minutes and is deactivated as soon a door is opened.

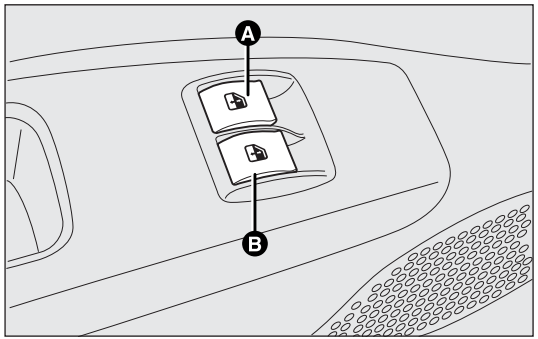

fig. 82 F0V0020m

ELECTRIC FRONT AND REAR WINDOWS
(for versions/markets where provided)

Driver's door

Five switches fig. 83 on the inner armrest control the following with the ignition key turned to MAR:

A left front window opening/closing;

B right front window opening/closing;

C left rear window opening/closing;

D right rear window opening/closing;

E inhibition of control switches on rear doors.

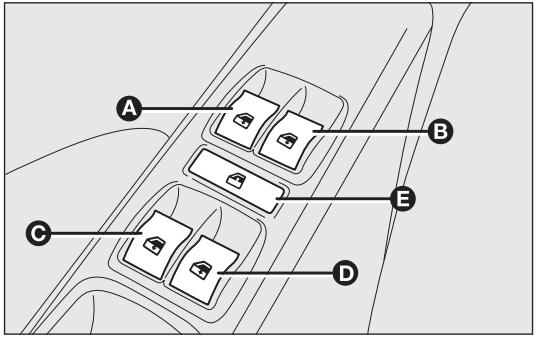

fig. 83

Front and rear passenger's doors
(for versions/markets where provided)

The switch controlling the corresponding window is located on the inner armrest of each door.

WARNING

Incorrect use of the electric window opening mechanism may be dangerous. Before and during operation, always check that no-one is exposed to the risk of being injured directly by the moving window or by objects getting caught and dragged.

WARNING

When leaving the vehicle, always remove the ignition key to avoid the risk of injury due to accidental operation of the electric window opening mechanism.

BOOT

OPENING THE TAILGATE FROM THE OUTSIDE

The tailgate (when unlocked) can be opened only from the outside by using the electric opening handle A-fig. 84 located under the large handle.

The tailgate can be opened at any time if the doors are unlocked.

To open it the handle must be enabled by opening one of the front doors or operating the remote control unlocking button (for Doblò/Doblò Combi versions). On Cargo versions, the opening of the tailgate is subject to the enabling of the handle. The handle is enabled after pressing the third button on the remote control or by operating the unlocking button from the interior of the vehicle. Opening can also take place by using the mechanical key or the metal insert for the remote control key.

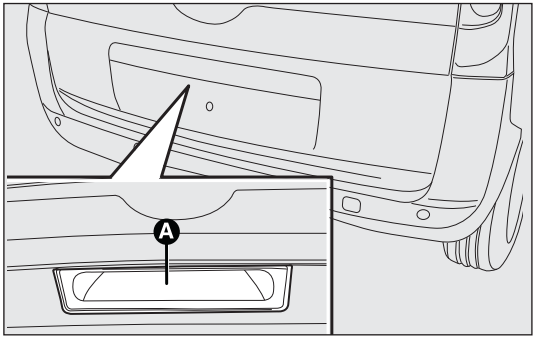

F0V0134m

fig. 84

EMERGENCY OPENING FROM THE INSIDE

In the event of an emergency, you can open the boot from inside the vehicle as follows:

- ❒ open the sliding side door and fully fold the rear seats;
- ❒ push lever A-fig. 85 inside the boot and open the rear door.

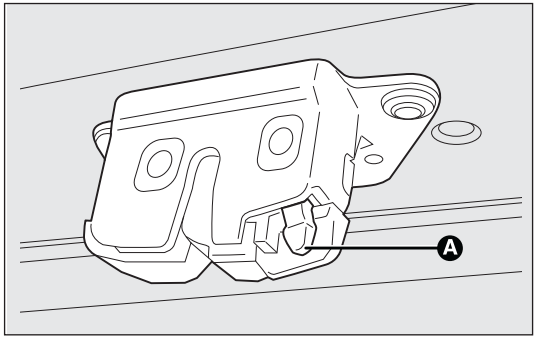

F0V0135m

fig. 85

WARNING

If you are travelling in areas with few refuelling stations and you want to transport fuel in a spare tank, comply with the law by using only an approved, suitably secured tank. Even then, you are still increasing the risk of fire in an accident.

WARNING

Never exceed the maximum allowed load in the boot (see "Technical Specifications"). Make sure that objects are well arranged in the boot so that they do not project forwards and injure passengers in the event of sudden braking.

EMERGENCY OPENING OF THE SWING DOORS FROM THE INSIDE

In the event of an emergency, you can open the boot from inside the vehicle as follows:

❒ open the sliding side door and lower the backrest of the rear seat to give you access to the load compartment (Doblò/Doblò Combi versions);

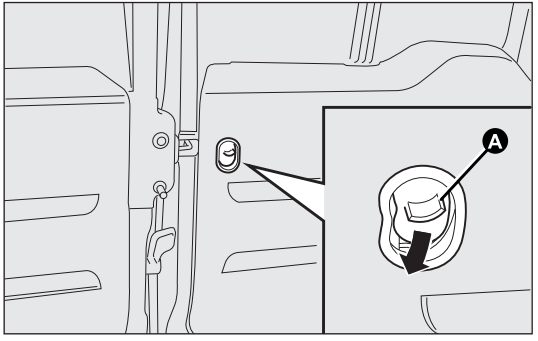

fig. 86

or

- ❒ open the sliding side door (Cargo versions);
- ❒ use device A-fig. 86 located on the inside of the right-hand swing door;
- ❒ open the left-hand swing door by pulling on its handle (see "Doors" in this section).

WARNING

If you are travelling in areas with few refuelling stations and you want to transport fuel in a spare tank, comply with the law by using only an approved, suitably secured tank. Even then, you are still increasing the risk of fire in an accident.

WARNING

Never exceed the maximum allowed load in the boot (see "Technical Specifications"). Make sure that objects are well arranged in the boot so that they do not project forwards and injure passengers in the event of sudden braking.

REMOVING THE PARCEL SHELF

The parcel shelf consists of two parts. To remove it completely, proceed as follows:

- ❒ open the rear swing doors, then lift the front part A-fig. 87 by unhooking pin A-fig. 88.
- ❒ lift the rear part B-fig. 87 by unhooking pins B and C-fig. 88.

If the seat is completely folded down, remove the parcel shelf as described and store it horizontally between the back of the front seats and the folded rear seat.

To refit the parcel shelf, follow the same procedure in reverse.

WARNING

You must not use the folded rear seat to carry luggage. The load could be thrown forward into the back of the front seats, seriously injuring the occupants.

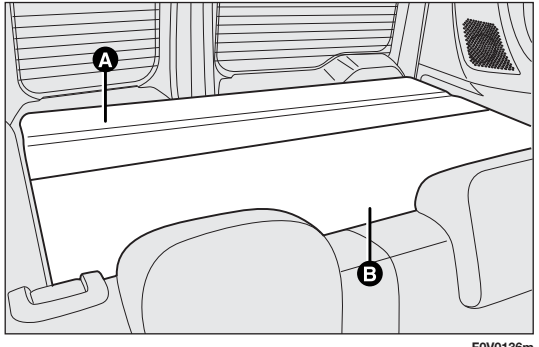

F0V0136m

fig. 87

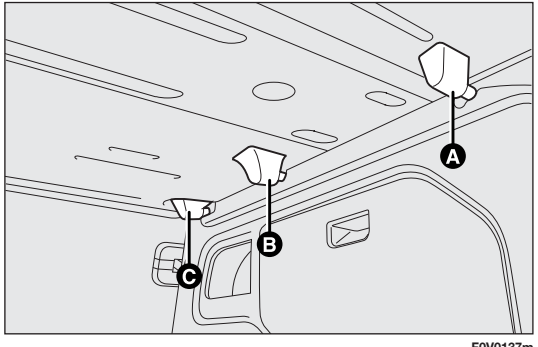

F0V0137m

fig. 88

EXTENDING THE BOOT

Proceed as follows:

- ❒ open the rear doors and remove the parcel shelf (as described previously);
- ❒ fully lower the rear seat head restraints;
- ❒ move the seat belt to the side, making sure that it is fully extended and not twisted;
- ❒ lift backrest retainer lever A-fig. 89a and fold the backrest forwards to give you a flat loading area. When you lift the lever, you will see a red band.
- ❒ to widen the load compartment further, lift lever B-fig. 89b on the side of the cushion that will raise automatically; intervene manually to fold seat and backrest completely forward, fig. 89c.

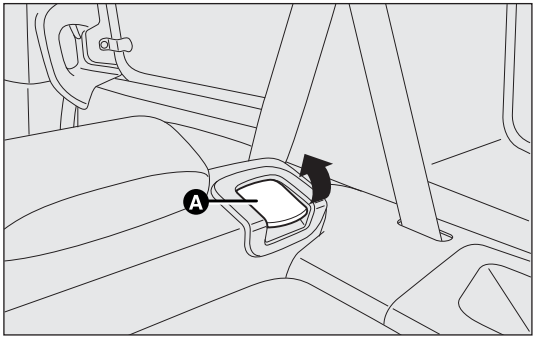

F0V0127m

fig. 89a

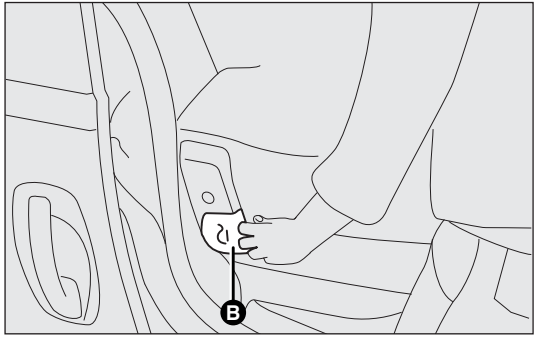

F0V0202m

fig. 89b

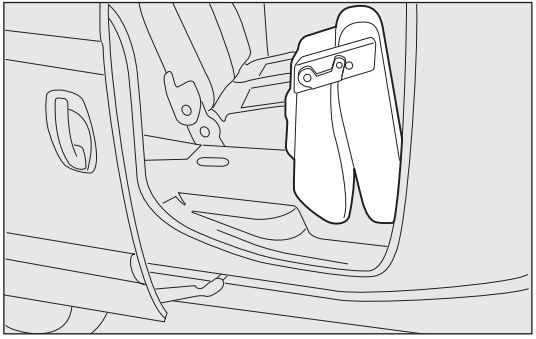

F0V0203m

fig. 89c

On versions with the backrest folded and the parcel shelf folded (for versions/markets where provided) a load compartment fig. 90 can be created.

WARNING

Make sure that the objects are positioned carefully and secured to the hooks on the floor to prevent them flung forwards in the event of sharp braking and causing injury to the passengers.

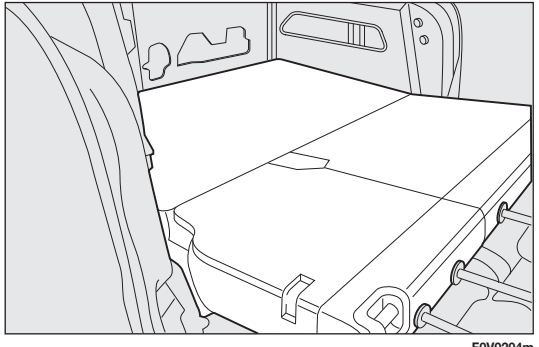

F0V0204m

fig. 90

The parcel shelf in its lower position may support a maximum load of 70 kg on a minimum resting surface of 400 mm x 400 mm fig. 90a.

N.B. There are bands on the rear seats under the cushion to attach the folded seat to the front seat head restraint rods.

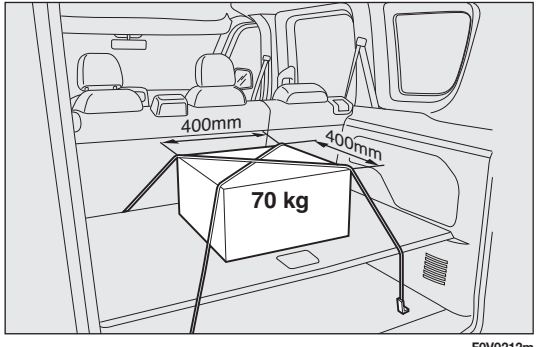

F0V0212m

fig. 90a

SECURING YOUR LOAD

To make it easier to secure your load, there are hooks (in various quantities depending on the version) fixed to the floor figs. 91-92.

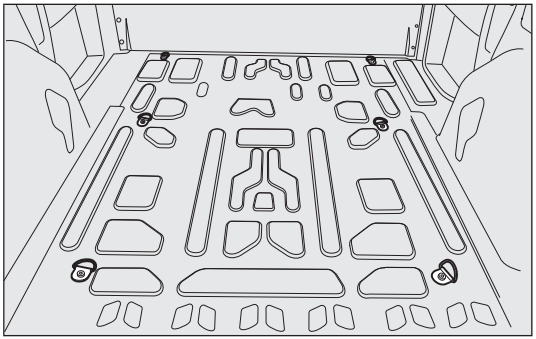

F0V0114m

fig. 91

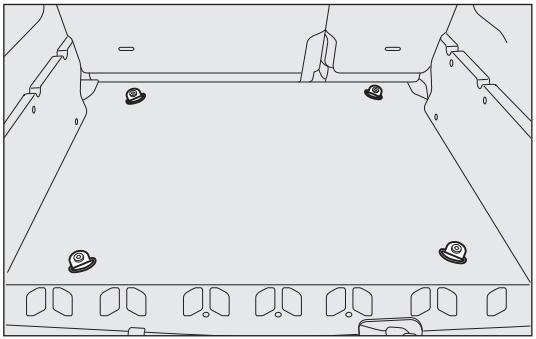

F0V0122m

fig. 92

BONNET

Opening figs. 93-94-95

Proceed as follows:

- ❒ pull lever A-fig. 93 in the direction indicated by the arrow;
- ❒ release catch B-fig. 94, lift the bonnet and, at the same time, release the support rod C-fig. 95 from its locking device D-fig. 95, then insert the end of the rod into housing E-fig. 95 of the bonnet (bigger hole) and push into the safety position (smaller hole), as shown in the diagram.

WARNING

If the supporting rod is not positioned correctly, the bonnet may fall violently. Only perform these operations when the vehicle is stationary.

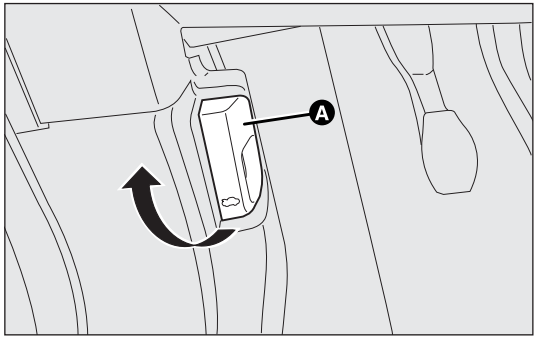

F0V0047m

fig. 93

WARNING

Before opening the bonnet, check that windscreen wiper arm is not lifted from the windscreen.

WARNING

When the engine is warm, work carefully inside the engine compartment to avoid getting burnt. Keep your hands away from the fan: it may turn on even with key removed from the switch. Wait for the engine to cool down.

WARNING

Pay attention to scarves, ties and other loose-fitting garments. If they accidentally come into contact with moving parts, they may get caught up and dragged with serious risks for those wearing them.

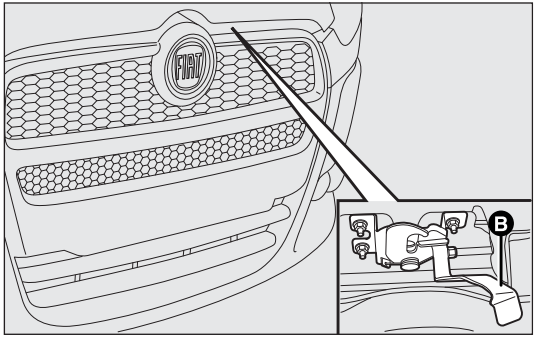

F0V0048m

fig. 94

Closing fig. 95

Proceed as follows:

- ❒ Hold the bonnet up with one hand and, with the other, remove rod C from housing E and fit it back into its catch D;
- ❒ Lower the bonnet to approximately 20 centimetres from the engine compartment and let it drop. Make sure that the bonnet is completely closed and not only fastened by the safety catch by trying to open it. If it is not perfectly closed, do not try to press the bonnet down but open it and repeat the procedure.

WARNING

For safety reasons, the bonnet must always be perfectly closed while travelling. Make sure that the bonnet is perfectly closed and that the lock is engaged. If you discover whilst driving that the lock is not fully engaged, stop immediately and close the bonnet in the correct manner.

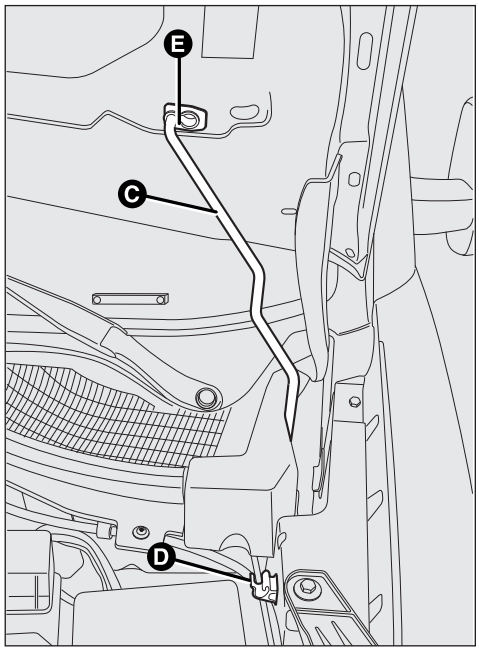

fig. 95

ROOF RACK/SKI RACK

FASTENERS

The fasteners are located at points A, B and C-fig. 99.

LONGITUDINAL BARS

(for versions/markets where provided)

On some versions, the vehicle has two longitudinal bars which, with the addition of special accessories, can be used to carry various objects (e.g. skis, surfboards, etc.).

WARNING

Always strictly obey local laws regarding maximum roof load measurements.

Spread the load evenly and take account of the extra sensitivity to cross winds when driving.

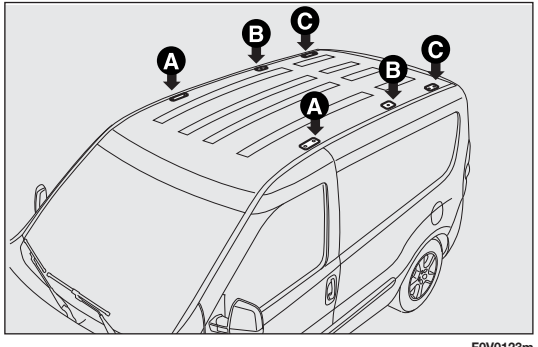

F0V0123m

fig. 99

WARNING

After having travelled several kilometres, check that the attachment retaining bolts are still securely fastened.

Never exceed the maximum permitted load (see "Technical specifications").

HEADLIGHTS

LIGHT BEAM DIRECTION

The correct direction of the headlights is essential for the comfort and safety of the driver and other road users. To ensure the best visibility conditions when travelling with the headlights on the headlight alignment must be correct. Contact the Fiat Service Network to have the direction checked and, if necessary, adjusted.

HEADLIGHT ALIGNMENT CORRECTOR

This device works with the ignition key in the MAR position and the dipped headlamps on.

The vehicle tilts backwards when it is laden, raising the light beam. The direction of the beam must therefore be adjusted in this case.

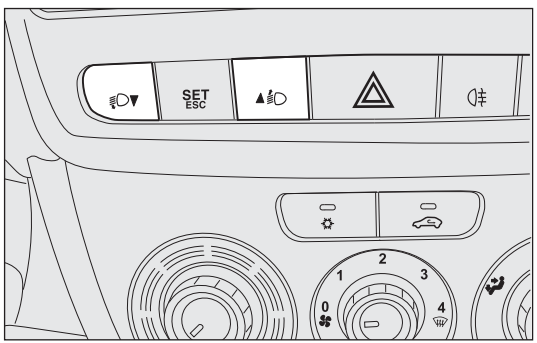

F0V0021m

fig. 100

Headlamp alignment adjustment

To adjust, press buttons and fig. 100 on the control panel.

The display located on the instrument panel provides the visual indication of the positions during the adjustment operation.

Position 0 – one or two people in the front seats.

Position 1 – five people.

Position 2 – five people + load in the boot.

Position 3 – driver + maximum permitted load stowed in the luggage compartment.

WARNING Check the light beam alignment every time the load transported changes.

FOG LIGHT DIRECTION

(for versions/markets where provided)

Contact the Fiat Service Network to have the direction checked and, if necessary, adjusted.

ADJUSTING THE HEADLIGHTS WHEN ABROAD

The dipped headlamps are adjusted to work in the country where the vehicle was originally purchased. When in countries where you drive on the other side of the road, you need to alter the light beam direction by affixing a specially designed self-adhesive film in order not to dazzle the vehicles travelling in the opposite direction. This film is provided by Lineaccessori Fiat and is available at Fiat Service Network.

ABS SYSTEM

(for versions/markets where provided)

This is an integral part of the braking system, which prevents one or more wheels from locking or slipping regardless of the road surface conditions and braking action, giving the best control during emergency braking.

The EBD system (Electronic Braking Force Distribution) completes the system, allowing the braking action to be distributed between the front and rear wheels.

WARNING For maximum efficiency of the braking system, a bedding-in period of about 500 km is needed: during this period it is better to avoid sharp, repeated and prolonged braking.

SYSTEM INTERVENTION

The driver can tell the ABS system has come into action because the brake pedal pulsates slightly and the system gets noisier: it means that the vehicle speed should be altered to suit the type of road surface.

WARNING

When the ABS intervenes and you notice the brake pedal pulsating, do not be afraid to keep the pedal pushed down. This will help you to stop in the shortest distance possible, depending on the road conditions.

WARNING

If the ABS intervenes, it means you have almost reached the grip limit between the tyres and the road surface: slow down to make sure you can use the available grip.

WARNING

The ABS gets the most out of the available grip, but it cannot increase it; you must therefore always take care when driving on slippery roads. Do not take any unnecessary risks.

FAILURE INDICATIONS

ABS failure

ABS failure is indicated by warning light (ABS) in the instrument panel coming on (together with the appropriate message on the multifunction display on some versions) (see "Warning lights and messages").

In the case, the braking system will work as normal without the extra capacity offered by the ABS system. Drive carefully to the nearest Fiat Service Network to have the system checked.

EBD failure

EBD failure is indicated by warning lights (ABS) and (!) in the instrument panel coming on (together with the appropriate message on the multifunction display on some versions) (see "Warning lights and messages").

In this case, the rear wheels may suddenly lock and the vehicle may swerve when braking sharply. Drive carefully to the nearest Fiat Service Network to have the system checked.

WARNING

If only warning light (!) lights up in the instrument panel (with a message in the multifunction display on some versions), stop the vehicle immediately and contact the nearest Fiat Service Network. Fluid leaking from the hydraulic system will compromise the operation of the braking system, whether it is of the conventional type or with ABS.

BRAKE ASSIST (emergency braking assistance integrated in ESP)
(for versions/markets where provided)

This system (which cannot be deactivated) recognises emergency braking conditions according to the speed of operation of the brake pedal and provides an additional hydraulic braking pressure to support that provided by the driver. This allows faster and more powerful operation of the braking system.

Brake Assist is deactivated on the versions equipped with ESP, in the event of ESP system failure (indicated by warning light coming on together with the message in the multifunction display, where provided).

WARNING

When the ABS cuts in, and you feel the brake pedal pulsating, do not remove your foot, but keep it pressed; in doing so you will stop in the shortest distance possible under the road conditions at the time.

ESP SYSTEM (Electronic Stability Program)

(for versions/markets where provided)

This is an electronic system that controls vehicle stability in the event of tyre grip loss, helping to maintain directional control.

The ESP system is therefore particularly useful when grip conditions of road surfaces change.

The MSR system (adjustment of the engine braking torque during gear downshifts) and the HBA system (automatic increase in the braking pressure during emergency braking) are present with ESP, ASR and Hill Holder systems (for versions/markets where provided).

SYSTEM INTERVENTION

This is signalled by the flashing of warning light in the instrument panel, to inform the driver that the vehicle is in critical stability and grip conditions.

SYSTEM ACTIVATION

The ESP system is automatically activated when the vehicle is started and cannot be de-activated.

FAILURE INDICATIONS

In the event of a failure, the ESP will be automatically switched off and the warning light will come on permanently in the instrument panel along with a message in the multifunction display (for versions/markets where provided) (see "Warning lights and messages" section). The LED on the ASR OFF button will also light up. Contact the Fiat Service Network as soon as possible if this happens.

WARNING

Do not take unnecessary risks, even if your vehicle is fitted with an ESP system. Your driving style must always be suited to the road conditions, visibility and traffic. The driver is always ultimately responsible for road safety.

HILL HOLDER SYSTEM

This is an integral part of the ESP system and facilitates hill starts. It is automatically activated in the following conditions:

- ❒ uphill: vehicle stationary on a road with a gradient higher than 5%, engine running, brake pedal pressed and gearbox in neutral or gear other than reverse;
- ❒ downhill: vehicle stationary on a road with a gradient higher than 5 per cent, engine running, brake pedal depressed and reverse gear engaged.

At pick-up, the ESP system control unit will maintain the braking pressure at the wheels until the necessary engine torque for moving away is reached or, in any case, for a maximum of 1.75 seconds in order to move easily from the brake pedal to the accelerator pedal.

If the vehicle has not departed after this time, the system will deactivate automatically by gradually releasing the braking pressure.

During this release stage, the typical brake disengagement noise indicating that the vehicle is going to move imminently will be heard.

Failure indications

System failure is indicated by the turning on of warning light in the instrument panel with digital display and warning light in the instrument panel with multifunction display (for versions/markets where provided) (see section "Warning lights and messages").

IMPORTANT The Hill Holder system is not a parking brake; therefore, never leave the vehicle without having engaged the handbrake, turned the engine off and engaged the first gear.

WARNING

For the correct operation of the ESP and ASR systems, the tyres must absolutely be the same make and type on all wheels, in perfect condition and, above all, of the type, make and size specified.

ASR SYSTEM (Anti-slip Regulator)

This is a traction control system that cuts in automatically every time one or both drive wheels slip.

Depending on the slipping conditions, two different control systems are activated:

- ❒ if both drive wheels are slipping, the ASR function intervenes by reducing the power transmitted by the engine;
- ❒ if the slipping only involves only one drive wheel, the ASR system cuts in by automatically braking the wheel that is slipping.

The action of the ASR system is especially useful in the following conditions:

- ❒ slipping of the inner wheel when cornering due to the effect of dynamic load changes or excessive acceleration;
- ❒ too much power transmitted to the wheels also in relation to the conditions of the road surface;
- ❒ acceleration on slippery, snowy or icy surfaces;
- ❒ in the case of loss of grip on a wet surface (aquaplaning).

WARNING

For the correct operation of the ESP and ASR systems, the tyres must absolutely be the same make and type on all wheels, in perfect condition and, above all, of the type, make and size specified.

MSR system (engine drive regulator)

This is an integral part of the ASR system that, in the event of a sudden gear down shift, cuts in and provides torque to the engine thus preventing excessive drive wheel drive which, especially in poor grip conditions, can lead to a loss of stability.

Engagement/disengagement of the ASR system

The ASR system switches on automatically each time the engine is started.

When travelling, the ASR can be switched off and on again by pressing switch fig. 101, which can be found between the front seats to the side of the handbrake lever.

When the ASR is switched off, this is shown by the LED on the switch coming on and by the relevant message appearing on the multifunction display, where provided.

If the ASR is switched off during a journey, it comes back on automatically when the engine is next started up.

When travelling on snowy roads with snow chains, it may be helpful to turn the ASR off: in fact, in these conditions, the drive wheels slipping during take off gives you better traction.

WARNING

Do not take unnecessary risks, even if your vehicle is fitted with this system. Your driving style must always be suited to the road conditions, visibility and traffic. The driver is always ultimately responsible for road safety.

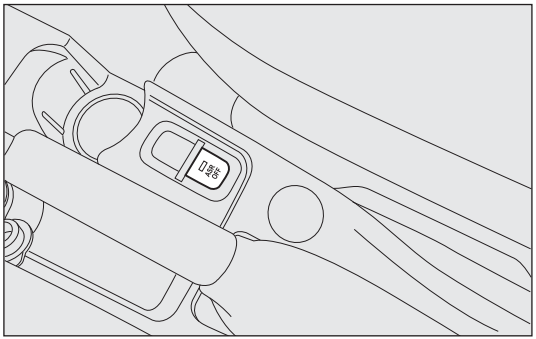

F0V0124m

fig. 101

For the correct operation of the ASR system, the tyres must absolutely be the same make and type on all wheels, in perfect condition and, above all, of the type, make and size specified.

FAILURE INDICATIONS

In the event of a failure, the ASR will be automatically switched off and warning light ⚠ will appear permanently in the instrument panel along with a message in the multifunction display, where provided (see "Warning lights and messages"). In this case, contact the Fiat Service Network as soon as possible.

EOBD SYSTEM

The EOBD system (European On Board Diagnosis) allows continuous diagnosis of emission-related components on the vehicle. It also alerts the driver, by turning on warning light in the instrument panel (together with the relevant message in the display on some versions), when these components are no longer in peak condition (see "Warning lights and messages" section).

The goal of the system is to:

- ❒ keep the system efficiency under control;
- ❒ warn about increased emissions due to a vehicle malfunction;
- ❒ warn of the need to replace deteriorated components.

The system also has a diagnostic connector that can be interfaced with appropriate equipment, which makes it possible to read the error codes memorized in the control unit together with a series of specific parameters for engine operation and diagnosis.

This check can also be carried out by traffic authorities.

WARNING After eliminating the problem, to check the system completely, Fiat Service Network run a bench test and, if necessary, road tests which may also call for a long journey.

WARNING

Go to the Fiat Service Network as soon as possible if warning light does not light up when the ignition key is turned to MAR or if, while travelling, the warning light comes on either permanently or flashing (along with a message on the display on certain versions). The operation of the warning light may be checked by the traffic authorities using specific devices. Respect the regulations in force in the country where you are driving.

SPEED BLOCK

(for versions/markets where provided)

The vehicle is equipped with a speed limitation function that can be set at the user's request to one of four predefined values: 90, 100, 110, 130 km/h.

To activate/deactivate this function, contact the Fiat Service Network.

Following the operation, a sticker will be applied to the windscreen showing the top speed setting.

WARNING The speedometer could show a higher top speed than the one set by the Dealership in accordance with the regulations in force.

PARKING SENSORS

These are located in the rear bumper fig. 102 and their function is to inform the driver, through an intermittent buzzer, about the presence of obstacles behind the vehicle.

ACTIVATION

The sensors are automatically activated when reverse gear is engaged.

As the obstacle behind the vehicle gets closer to the bumper, the buzzer becomes more frequent.

BUZZER

The frequency of the buzzer:

❒ increases as the vehicle gets closer to the obstacle;

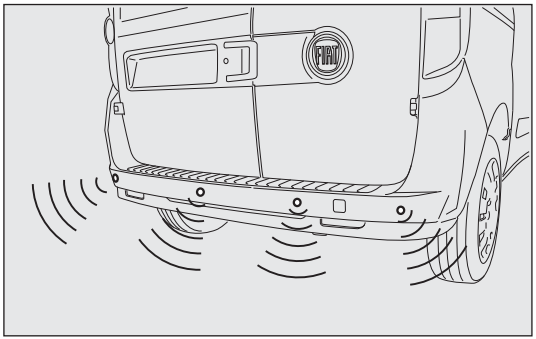

fig. 102

❒ becomes continuous when the distance between the vehicle and the obstacle is less than about 30 cm, and stops immediately if the distance increases;

❒ remains constant if the distance between the vehicle and the obstacle remains unchanged.

FAILURE INDICATIONS

Parking sensor failures are indicated, when engaging reverse gear, by a three second beep.

WARNING

The sensors must be clean of mud, dirt, snow and ice in order for the system to work. Be careful not to scratch or damage the sensors while cleaning them. Avoid using dry, rough or hard cloths. The sensors should be washed using clean water with the addition of car shampoo if necessary. When using special washing equipment such as high pressure jets or steam cleaning, clean the sensors very quickly keeping the jet more than 10 cm away.

OPERATION WITH TRAILER

Parking sensor operation is automatically disabled when the electric cable plug of the trailer is fitted into the vehicle tow hook socket.

The sensors are automatically enabled again when the trailer cable plug is removed.

GENERAL WARNINGS

- ❒ When parking, pay special attention to obstacles that may be set above or below the sensors.
- ❒ Sometimes, objects located very near the rear of the vehicle are not detected and could therefore damage the vehicle or be damaged themselves.
- ❒ The signals sent out by the sensors can be altered by dirt, snow or ice deposited on the sensors or by ultrasound systems (e.g. truck pneumatic brakes or pneumatic drills) near the vehicle.
- ❒ The parking sensors work properly with the swing doors closed. If they are open, they can cause the system to send false signals: always close the rear doors.

WARNING

The ultimate responsibility when parking and carrying out other dangerous manoeuvres still rests with the driver. When parking, make sure that no-one is standing in the area, especially children or animals. Parking sensors are designed to assist drivers; however, you must always concentrate fully during potentially dangerous manoeuvres, even if carried out at low speeds.

START&STOP SYSTEM

FOREWORD

The Start&Stop device automatically stops the engine each time the vehicle is stationary and starts it again when the driver wants to move off.

This improves the efficiency of the vehicle by reducing fuel consumption, the emission of harmful gases and noise pollution.

The system is activated each time the vehicle is started.

OPERATING MODES

Engine cut-out mode

WITH MANUAL TRANSMISSION

With the vehicle stationary, the engine cuts out with the gearbox in neutral and the clutch pedal released.

F0V0040m

fig. 103

WITH ROBOTISED GEARBOX

The engine cuts out if the vehicle stops with the brake pedal pressed.

This condition can be maintained even if the brake pedal is not depressed, if the gear lever is in position N.

N.B.: The engine can only be stopped automatically after a speed of about 10 Km/h is reached, to prevent the engine from being repeatedly stopped when driving at walking pace.

The engine being stopped is signalled by a symbol fig. 103 on the display, depending on the trim level.

Engine restarting mode

WITH NORMAL TRANSMISSION

Depress the clutch pedal to restart the engine.

WITH ROBOTIZED GEARBOX

If the gear lever is in position N, place it in any other gear, otherwise release the brake pedal or move the gear lever to (+), (–) or R.

MANUAL ACTIVATION AND DEACTIVATION

The device can be activated/deactivated via button A-fig. 104 located to the side of the handbrake. When the function is not active, the button LED is on.

In addition, on some versions, additional information concerning the deactivation or activation of the Start&Stop system is given through a message in the display.

FAILED ENGINE CUT-OUT CONDITIONS

With the device activated, for reasons of comfort, limiting emissions and safety, the engine does not stop in certain conditions, including:

- ❒ engine still cold;
- ❒ particularly cold outside temperatures, where the appropriate indication is provided;
- ❒ battery not sufficiently charged;

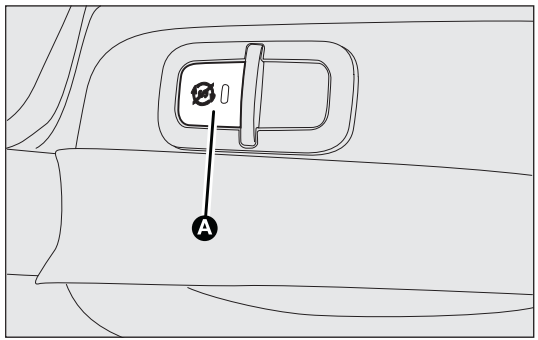

fig. 104 F0V0039m

- ❒ heated rear windscreen on;
- ❒ windscreen wipers working at maximum speed;
- ❒ particulate filter regeneration in progress (diesel engines only);
- ❒ driver's door not shut;
- ❒ driver's seat belt not fastened;
- ❒ reverse gear engaged (for example, during parking manoeuvres);
- ❒ automatic climate control is on and a comfortable temperature has not yet been reached or MAX – DEF function enabled.
- ❒ during the first period of use, to initialise the system

In the above cases, the warning light flashes fig. 103 and, where available, there is a message in the display.

RESTARTING CONDITIONS

For reasons of comfort, limiting pollutant emissions and safety purposes, the power unit can restart automatically without any action on behalf of the driver if certain conditions are met, including:

- ❒ battery not sufficiently charged;
- ❒ windscreen wipers working at maximum speed;
- ❒ reduced braking system vacuum, e.g. following the brake pedal being pressed repeatedly;
- ❒ vehicle in motion, for example when driving on hilly roads;
- ❒ stopping the engine through the Start&Stop system for more than about three minutes.
- ❒ automatic climate control system for establishing a comfortable temperature or enabling the MAX – DEF function.

With a gear engaged, the engine can only be automatically restarted by fully depressing the clutch pedal. The driver is asked to perform this operation through the warning light flashing in the instrument panel fig. 103 and, where provided, the message in the display.

N.B.: If the clutch is not depressed when the three minutes have elapsed since the engine was stopped, the engine can only be restarted using the key.

N.B.: If you stall the engine, for example by releasing off the clutch pedal quickly with gear engaged, if the Start&Stop system is activated, the engine can be restarted by fully depressing the clutch pedal or by putting the gear lever into neutral.

SAFETY FUNCTIONS

In engine cut-out conditions through the Start&Stop system, if the driver unfastens his/her seat belt and opens the driver's side door or the passenger's side door, the engine can only be restarted using the key.

The driver is notified of this condition by a buzzer, through the warning light flashing in the instrument panel fig. 103 and, where provided, by a message in the display.

ENERGY SAVING FUNCTION

(for versions/markets where provided)

If, after the engine has been automatically restarted, the driver does not take any action for a period of about 3 minutes, the Start&Stop system will definitively stop the engine to avoid fuel consumption. The engine can only be started using the key in such cases.

N.B.: In any case, it is possible to keep the engine running by deactivating the Start&Stop system.

OPERATING IRREGULARITIES

In the case of malfunctions the Start&Stop system is disabled. The driver is informed of the problem by the general failure warning light A-fig. 105, where provided, coming on with an information message and the system failure symbol B-fig. 105 in the control panel.

In this case, contact the Fiat Service Network.

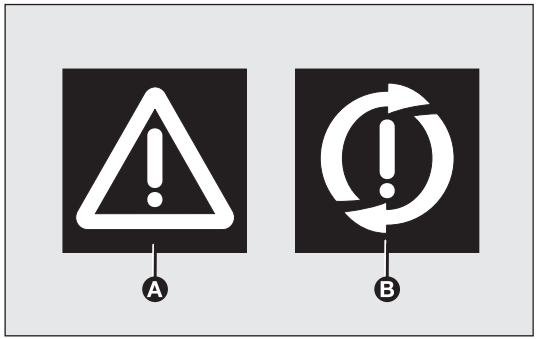

F0V0041m

fig. 105

VEHICLE INACTIVITY

Versioni con falso polo fig. 106

If the vehicle is inactive, special care must be taken to disconnect the battery electrical power supply. This procedure is carried out by disconnecting the rapid release negative terminal A from the negative false pole B because there is a battery status monitoring sensor D at the negative battery pole C which should never be disconnected except if the actual battery is replaced.

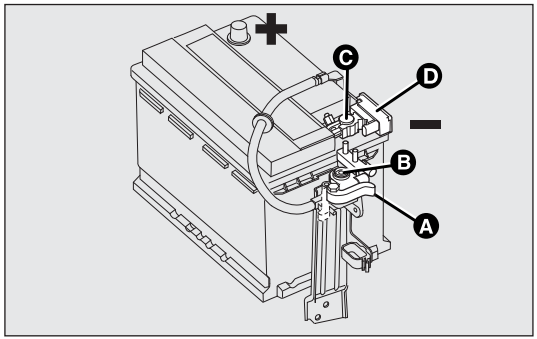

F0V0042m

fig. 106

Versioni prive di falso polo fig. 106a

In case of car inactivity, special attention must be paid due to the disconnection of the battery power supply. Proceed as follows: detach the connector (by pressing button B) from sensor C for monitoring the battery status installed on the battery negative pole D. This sensor should never be disconnected from the pole except if the battery is replaced.

WARNING

When replacing the battery, always go to the Fiat Service Network. Replace the battery using a new one of the same type and specifications.

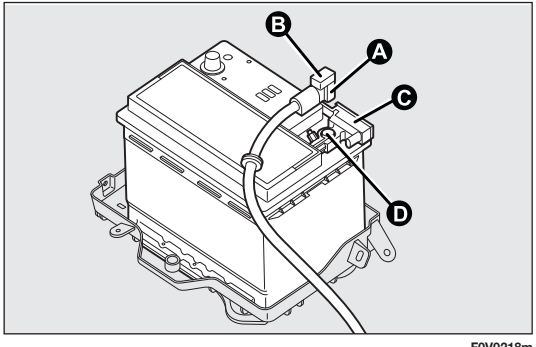

F0V0218m

fig. 106a

EMERGENCY STARTING fig. 107

When jump starting, never connect the negative lead (–) of the auxiliary battery to the negative pole C of the vehicle battery, but rather to either the false pole B or to an engine/gearbox earth point.

WARNINGS

WARNING

Before opening the bonnet, make sure that the vehicle is switched off and the key is in the OFF position. Follow the instructions on the dedicated plate on the front crossmember. It is advisable to extract the key when there are other people in the vehicle.

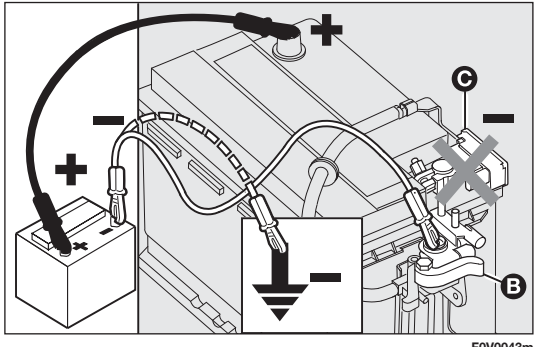

F0V0043m

fig. 107

WARNING

The vehicle should always be evacuated after the key has been removed or turned to the OFF position. During refuelling operations, it is necessary to make sure that the vehicle is off with the ignition key in the OFF position.

WARNING

For vehicles with a robotised transmission, if the engine cuts out automatically on a gradient, it is advisable to restart the engine by moving the gear lever towards (+) or (-) without releasing the brake pedal. For vehicles with robotised transmission, where the Hill Holder function is present, if the engine cuts out automatically whilst on a hill, it is advisable to restart it by moving the gear lever to (+) or (-) without releasing the brake pedal to make the Hill Holder function – which is only active when the engine is running – available.

WARNING

If you want to prioritise climate comfort, the Start&Stop system can be disabled to allow continuous operation of the climate control system.

RADIO

(for versions/markets where provided)

For the operation of the radio with CD/MP3 player (for versions/markets where provided), read the Supplement attached to this Owner's Handbook.

WIRING FOR LIGHTWEIGHT SYSTEM

The system consists of:

- ❒ radio power cables;
- ❒ front speaker cables (located on door mirror trims);
- ❒ speaker cables on front door panels;
- ❒ rear speaker cables (located next to the parcel shelf) (for versions/markets where provided);
- ❒ radio compartment;
- ❒ aerial lead;
- ❒ aerial.

WIRING FOR HEAVYWEIGHT SYSTEM

The system consists of:

- ❒ radio power cables;
- ❒ rear speaker cables (located next to the parcel shelf) (for versions/markets where provided);
- ❒ two tweeters on the door mirror trims;
- ❒ two midwoofers on the lower part of the front doors;

- ❒ two rear speakers (located next to the parcel shelf) (for versions/markets where provided);
- ❒ radio compartment;
- ❒ aerial lead;
- ❒ aerial.

RADIO INSTALLATION

The sound system must be installed in the space occupied by the centre glove compartment where you will find the wiring. Press tabs A-fig. 108 to remove the compartment.

WARNING

To connect to the existing wiring in the vehicle, contact the Fiat Service Network to prevent any problems that could impair vehicle safety.

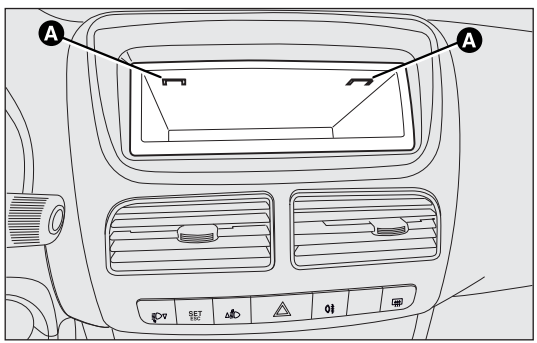

F0V0068m

fig. 108

INSTALLING ELECTRICAL/ ELECTRONIC DEVICES

Electrical and electronic devices installed after buying the vehicle by aftersales must carry the following label:

FGA S.p.A. authorises the installation of transceiving devices provided that they are installed by a specialised centre according to rules of good engineering practice and in compliance with the manufacturer's instructions.

WARNING Traffic authorities may not allow the vehicle on the road if devices are fitted that modify vehicle specifications. This may also invalidate the warranty in relation to faults caused by the change or either directly or indirectly related to it.

FGA S.p.A. shall not be liable for damage caused by the installation of accessories either not supplied or recommended by FGA S.p.A. and/or not installed in compliance with the provided instructions.

RADIO TRANSMITTERS AND MOBILE PHONES

Radiotransmitting apparatus (e.g. car mobile phones, CB radios etc.) should not be used inside the vehicle unless a separate aerial is mounted on the roof.

WARNING The use of similar devices inside the passenger compartment (without an external aerial) may, in addition to potential damage to the health of the passengers, cause malfunctions in the vehicle electronic systems, compromising the safety of the vehicle.

In addition, the transmission and reception of these devices may be affected by the shielding effect of the vehicle body.

With regard to EC-approved mobile phones (GSM, GPRS, UMTS), you should adhere strictly to the instructions provided by the mobile phone's manufacturer.

REFUELLING THE VEHICLE

PETROL ENGINES

Use unleaded petrol only, with an octane number (R.O.N.) no lower than 95.

WARNING An inefficient catalytic silencer leads to harmful exhaust emissions, thus contributing to air pollution.

WARNING Never use leaded petrol, even in small amounts or in an emergency, as this would damage the catalytic silencer beyond repair.

DIESEL ENGINES

Operation at low temperatures

If the outside temperature is very low, the diesel thickens due to the formation of paraffin clots with consequent defective operation of the fuel supply system.

In order to avoid these problems, different types of diesel are distributed according to the season: summer type, winter type and arctic type (cold/mountain areas). If refuelling with diesel fuel whose specifications are not suitable for the usage temperature, it is advisable to mix TUTELA DIESEL ART additive in the proportions shown on the container with the fuel. Pour the additive into the tank before the fuel.

If using/parking the vehicle in mountainous/cold areas for a long time, you should refuel with locally available diesel.

In this case, it is also advisable to keep the tank over 50% full.

For diesel engines, use only diesel fuel for motor vehicles in accordance with EN590 European specifications. The use of other products or mixtures may damage the engine beyond repair and consequently invalidate the warranty, depending on the damage caused. If you accidentally introduce other types of fuel into the tank, do not start the engine. Empty the tank. If the engine has run, even for a very short time, you will need to have the entire fuel supply system emptied in addition to the tank.

REFUELLING CAPACITY

To fill the tank completely, top up twice after the pump switches off. Further top ups could cause faults in the fuel supply system.

FUEL TANK CAP fig. 109

To open

1) Open the flap A-fig. 109 by pulling it outwards, keep the cap B still, insert the ignition key in the lock and turn it anticlockwise.

2) Turn the cap anticlockwise and remove it. The cap has a device C that attaches it to the flap so it cannot be lost. When refuelling, attach the cap to the flap as illustrated in the diagram.

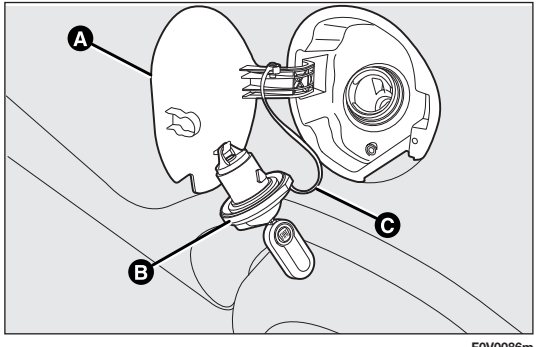

fig. 109

To close

1) Fit the cap (complete with key) and turn it clockwise until it clicks once or more.

2) Turn the key clockwise and extract it, then close the flap.

The hermetic seal may cause a slight increase in pressure in the tank. A suction noise when you release the cap is therefore entirely normal.

Do not place naked flames or lit cigarettes near to the fuel tank opening: fire risk. Keep your face away from the fuel tank opening to avoid breathing in harmful vapours.

PROTECTING THE ENVIRONMENT

The devices for reducing petrol engine emissions are the following:

- ❒ three-way catalytic converter;
- ❒ Lambda sensors;
- ❒ evaporation prevention system.

In addition, do not let the engine run, even for a test, with one or more spark plugs disconnected.

The following devices are used for reducing diesel fuel engine emissions:

- ❒ oxidising catalytic converter;
- ❒ exhaust gas recirculation system (EGR);
- ❒ diesel particulate filter (DPF) (for versions/markets where provided).

DIESEL PARTICULATE FILTER (DPF)

(for versions/markets where provided)

The Diesel Particulate Filter is a mechanical filter, integral with the exhaust system, that physically traps carbon particles present in the exhaust gases of Diesel engines.

It is needed to eliminate almost all carbon particles in compliance with current/future legislation. During normal use of the vehicle, the engine management control unit records a set of data (e.g. journey time, type of route, temperatures, etc.) and it will then calculate how much particulate has been trapped by the filter.

Since the filter is a collecting system, it should be regularly regenerated (cleaned) by burning the carbon particles. The regeneration procedure is controlled automatically by the engine management control unit according to the filter conditions and vehicle use conditions.

During regeneration, the following may occur: a limited increase in the engine speed, activation of the fan, a limited increase in fumes and high temperatures at the exhaust. These are not faults; they do not impair vehicle performance or damage the environment. If the dedicated message is displayed, refer to the “Warning lights and messages” section.

SEAT BELTS

USING THE SEAT BELTS fig. 110

Wear the belt keeping the torso upright and rested against the backrest.

To fasten the seat belts, hold tongue A-fig. 110 and insert it into buckle B until it locks into place.

If the seat belt jams, let it rewind for a short stretch, then pull it out again without jerking.

To unfasten the seat belts, press button C. Guide the seat belt with your hand while it is rewinding, to prevent it from twisting.

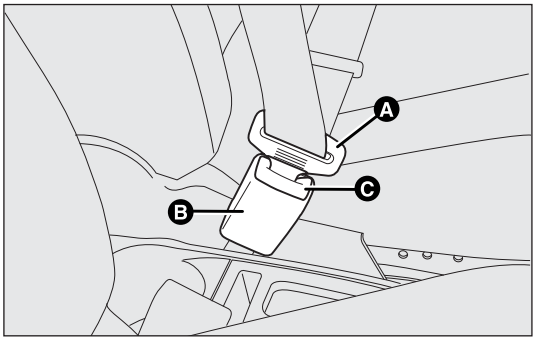

fig. 110

Through the reel, the belt automatically adapts to the body of the passenger wearing it, allowing freedom of movement.

The reel may lock up when the vehicle is parked on a steep slope: this is perfectly normal. Furthermore, the reel mechanism locks the belt if it is pulled sharply or in the event of sudden braking, collisions and high-speed bends.

WARNING

Never press button C-fig. 110 when travelling.

All rear seats are fitted with inertia seat belts with three anchor points and a reel.

WARNING

Remember that, in the event of a violent collision, back-seat passengers not wearing seat belts represent a serious danger to the front-seat passengers as well as to themselves.

The rear seat belts must be worn as shown in figs. 111a-111b.

IMPORTANT The backrest is correctly secured when the red band next to the levers A-fig. 112 disappears. This red band indicates that the backrest is not secured.

IMPORTANT When putting the seats back to their normal position, make sure the seat belts are positioned so they are ready to use.

WARNING

Make sure the backrest is properly secured at both sides (red bands B not visible) to prevent it moving forward in the event of sharp braking, causing injuries to passengers.

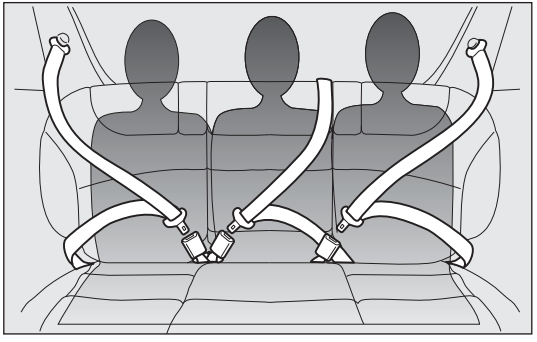

F0V0126m

fig. 111a - Rear seats 1st row

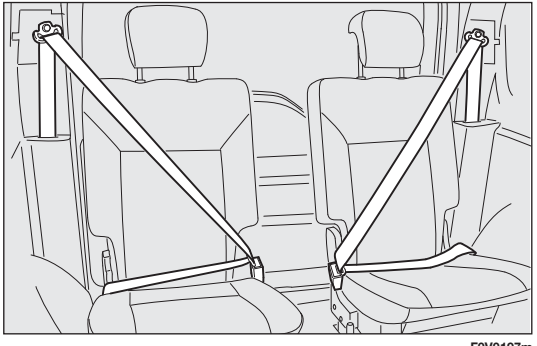

F0V0197m

fig. 111b - Rear seats 2nd row

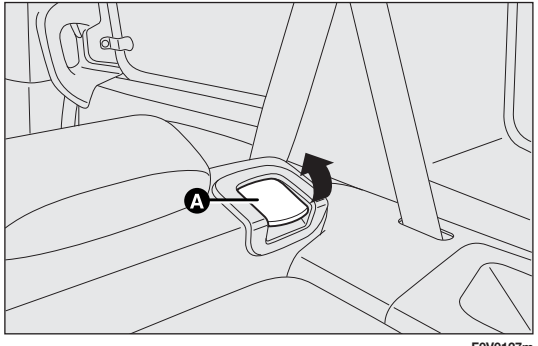

F0V0127m

fig. 112

SBR SYSTEM

The vehicle is equipped with the SBR (Seat Belt Reminder) system, which warns the driver (on all versions) and the front passenger (on Doblò/Doblò Combi versions) if their seat belt is not fastened, as follows:

- ❒ warning light comes on permanently and the buzzer sounds continuously for the first six seconds;
- ❒ warning light flashes and the beeper sounds intermittently for the next 90 seconds.

For permanent deactivation, contact a Fiat Dealership.

The SBR system can also be reactivated through the set-up menu.

PRETENSIONERS

To increase the protective efficiency of the front seat belts, the vehicle is fitted with pretensioners. These devices, in the event of a violent head-on crash or side impact, rewind the seat belts a few centimetres. In this way, they ensure that the belts fit tightly to the wearer before the restraining action begins.

The seat belt reel locks to indicate that the pretensioner has cut in; the seat belt cannot be drawn back up even when guided manually.

IMPORTANT To obtain the highest degree of protection from the action of the pretensioning device, wear the seat belt so it fits snugly over the chest and hips.

A small amount of smoke may be produced when the pretensioners cut in. This smoke is not toxic and does not indicate a fire.

The pretensioner does not require any maintenance or lubrication. Anything that modifies its original conditions invalidates its efficiency. If, due to unusual natural events (floods, sea storms, etc.), the device has been affected by water and mud, it absolutely must be replaced.

WARNING

The pretensioner can be used only once. Go to a Fiat Dealership to have it replaced after it has been deployed. See the label inside the glove box to check the status of the device; go to a Fiat Dealership when it is time to replace it.

Operations which lead to knocks, vibrations or localised heating (over 100 °C for a maximum of six hours) in the area around the pretensioners may damage or trigger them. These devices are not affected by vibrations caused by uneven road surfaces or low obstacles such as kerbs, etc. Contact a Fiat Dealership for any assistance.

LOAD LIMITERS

(for versions/markets where provided)

To increase passenger safety, the front and rear (for versions/markets where provided) seat belt reels contain a load limiter which controls the force acting on the chest and shoulders during the belt restraining action in the event of a head-on collision.

GENERAL INSTRUCTIONS FOR USING THE SEAT BELTS

The driver is responsible for respecting (and ensuring that all the other passengers also respect) the local laws in force regarding the use of seat belts. Always fasten the seat belts before setting off.

Seat belts must also be worn by expectant mothers: the risk of injury in the event of an accident is greatly reduced for them and the unborn child if they are wearing a seat belt. Pregnant women must position the lower part of the belt very low down so that it passes over the hips and under the abdomen (see fig. 113).

F0V0106m

fig. 113

IMPORTANT The belt must not be twisted. The upper part must cross the shoulder and the chest diagonally. The lower part must fit over the hips (as shown in fig. 114) rather than the abdomen of the passenger. Do not use devices (clips, clamps, etc.) that prevent the belts from being snug to the passenger's body.

WARNING

For maximum protection, keep the backrest straight: lean back into the backrest and keep the seat belt fairly tight across the chest and hips. Always fasten the seat belts on both the front and the rear seats! Travelling without seat belts will increase the risk of severe injury and even death in the event of an accident.
Never disassemble or tamper with the seat belt or pretensioner components. All operations must be performed by qualified and authorised personnel. Always contact a Fiat Dealership.

IMPORTANT Each seat belt should be used by only one person: never travel with a child sitting on the passenger's lap with a single belt to protect them both fig. 115. Do not fasten other objects to the body.

F0V0107m

fig. 114

F0V0108m

fig. 115

WARNING

If the belt has been subjected to heavy stress, for example after an accident, it should be changed completely together with the anchors, anchor fastening screws and the pretensioner. In fact, even if the belt has no visible defects, it could have lost its resilience.

SEAT BELT MAINTENANCE

Observe the following precautions for correct seat belt maintenance:

- ❒ always make sure the belt is well stretched and never twisted; make sure that it is free to run without obstructions;
- ❒ replace the belt after a serious accident, even if it does not appear damaged. Always replace the seat belt if the pretensioners were deployed;
- ❒ To clean the belt, wash by hand with water and mild soap, rinse and leave to dry in the shade. Do not use strong detergents, bleach, paints or any other chemicals which could damage the belt fibres;
- ❒ prevent the reels from getting wet: their correct operation is guaranteed only if water does not get inside;
- ❒ replace the seat belt if it shows significant signs of wear and tear.

CARRYING CHILDREN SAFELY

For optimum protection in the event of a crash, all passengers must be seated and wearing adequate restraint systems.

This is even more important for children.

This prescription is compulsory in all EU countries according to EC Directive 2003/20/EC.

Compared with an adult, a child's head is larger and heavier in proportion to his/her body and the child's muscular and bone structures are not fully developed. For this reason, they require restraint systems which are different from those used by adults to protect them in the event of an accident.

The result of research in relation to the best protection for children is illustrated in European Regulation ECE-R44, which divides the restraint systems into five groups in addition to making their use compulsory:

Group 0	up to 10 kg
Group 0+	up to 13 kg
Group I	9-18 kg
Group 2	15-25 kg
Group 3	22-36 kg

As you can see, the groups overlap partly and, in fact, there are devices on sale that cover more than one weight group.

All restraint devices must bear the type-approval data along with the control mark on a label firmly secured to the child seat which must never be removed.

Over 1.50 m in height, from the point of view of restraint systems, children are considered as adults and wear seat belts normally.

Lineaccessori Fiat has child seats for each weight group. These devices are recommended, having been specifically designed for Fiat vehicles.

WARNING

DANGER: Do not put cradle seats facing backwards on the front seat if the front passenger airbag is enabled. Deployment of the airbag in an accident could cause fatal injuries to the child. It is advisable to carry children on the rear seat, which is the most protected position in the event of an accident. Child seats must not be fitted on the front seat of vehicles with a passenger airbag; their deployment in an accident, however serious, could cause fatal injuries to the child. If necessary, children can travel in the front seat, if the front passenger airbag can be disabled. In this case, check that the airbag is actually deactivated by making sure the warning light appears on the instrument panel (see "Front passenger airbag" in the "Front airbags" section). Also, the passenger seat should be as far back as possible to avoid contact between the child seat and the dashboard.

GROUPS 0 and 0+

Babies up to 13 kg must be carried facing backwards on a cradle seat, which, by supporting the head, does not induce stress on the neck in the event of sharp deceleration.

The cradle is restrained by the vehicle seat belts, as shown in fig. 116 and, in turn, it must restrain the child with its own belts.

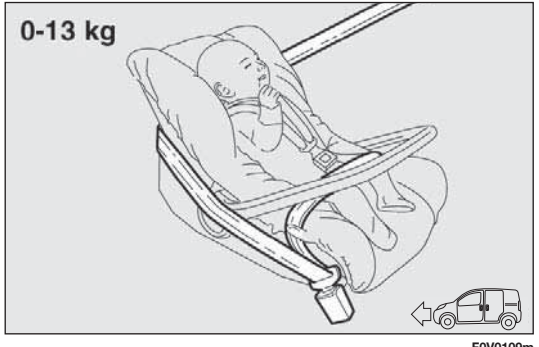

F0V0109m

fig. 116

GROUP 1

From 9 kg to 18 kg, children may be carried facing forwards fig. 117.

WARNING

The diagrams are indicative and provided for assembly purposes only. Fit the child seat according to the instructions mandatorily supplied with the seat.

WARNING

There are seats with Isofix hooks which enable secure fastening to the seat without using the vehicle's seat belts. Follow the assembly instructions carefully.

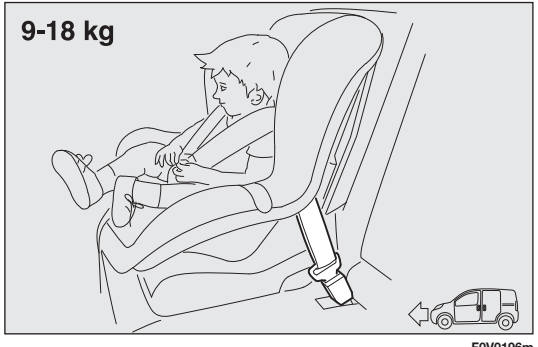

F0V0196m

fig. 117

GROUP 2

From 15 kg to 25 kg, children may be restrained directly by the vehicle seat belts fig. 118. The only function of the seat is to position the child correctly in relation to the belts, so that the diagonal part fits over the chest and not the neck, and that the horizontal part fits over the hips and not the abdomen.

WARNING

The diagrams are indicative and provided for assembly purposes only. For assembly, refer to the instructions mandatorily supplied with the child seat.

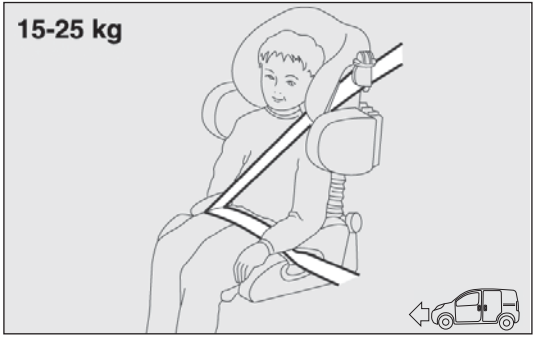

fig. 118

GROUP 3

For children between 22 kg and 36 kg, there are boosters allowing the seat belt to fit correctly.

Fig. 119 shows proper child seat positioning on the rear seat. Children over 1.50 m in height can wear seat belts like adults.

fig. 119

SUITABILITY OF PASSENGER SEATS FOR CHILD SEAT USE

The Fiat Doblò (homologation M1) complies with the new European Directive 2000/3/EC which governs the arrangement possibilities for child restraints on the seats of a vehicle as shown in the following table:

Group	Weight range	Front passenger seat	Rear passenger seat (first row)	Rear passenger seat (second row)
Groups 0, 0+	up to 13 kg	U	U	X
Group 1	9-18 kg	U	U	X
Group 2	15-25 kg	U	U	X
Group 3	22-36 kg	U	U	X

Key:

U = suitable for child restraint systems in the "Universal" category, according to European Standard ECE-R44 for the specified "Groups".

X = seat not suitable for children in this weight category.

Below is a summary of the rules of safety to be followed when carrying children:

❒ install the child seats on the rear seat, which is the most protected position in the event of an accident;

❒ if you need to deactivate the passenger airbag, always check that warning light has lit up on the instrument panel to make sure that it has actually been deactivated;

❒ carefully follow the instructions supplied with the child restraint system, which are mandatory. Keep the instructions in the vehicle along with the other papers and this handbook. Do not install second-hand child seats without instructions;

❒ always check the seat belt is well fastened by pulling the webbing;

❒ never carry two children in the same retaining system;

❒ always check that the belts are not resting on the child's neck;

❒ while travelling, do not let the child sit incorrectly or release the belts;

❒ never carry children on your lap, even newborns. No-one can hold a child in the event of an accident;

❒ In case of an accident, replace the child's seat with a new one.

WARNING

Do not put child seats on the front seat if there is a passenger airbag. Children must never travel on the front seat.

ISOFIX CHILD SEAT CAPABILITY

(for versions/markets where provided)

Isofix Universal child seats can be fitted on M1 homologation versions; this is a new standardised European system for transporting infants.

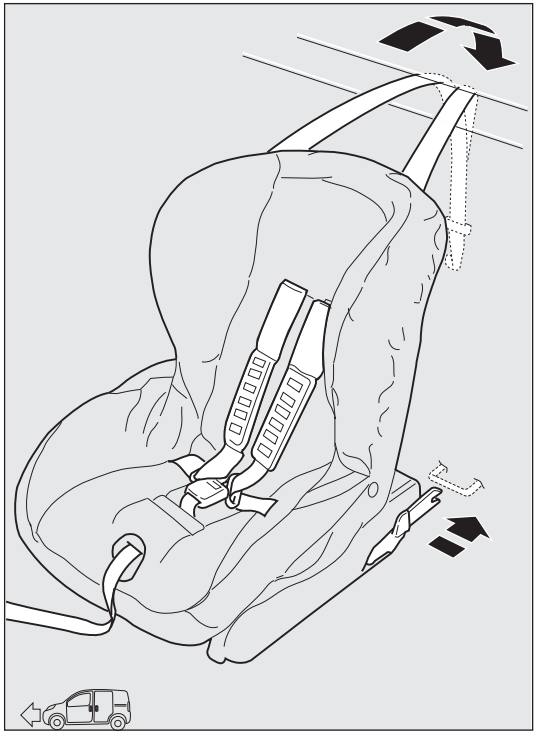

fig. 120 F0V0113m

Traditional child seats and Isofix child seats can be fitted together.

An example of such a seat is shown in fig. 120. The Universal Isofix child seat covers weight group 1.

Specific Isofix systems are provided for the other weight classes and may be used only if specifically designed, tested and approved for use on this vehicle (see list attached to the child seat).

Due to its different anchoring system, the child seat must be attached to the dedicated lower metal rings A-fig. 121, located between the backrest and rear cushion. After removing the rear parcel shelf (if present), secure the upper belt (provided with the child seat) to ring B-fig. 122 (one on each side) located behind the rear seat backrest.

Remember that in case of Universal Isofix child seats, you can use all seats approved with the marking ECE R44/03 "Universal Isofix".

Note To prevent possible scoring of the table seat backrest, with folded rear seat (for versions/markets, where provided), the mounting ring Isofix B - fig. 122 (one on each side) is covered with a cloth cap, to be removed for correctly fastening the child seat.

The Universal Isofix "Duo Plus" child seat and the special "Bimbo Fix" seat are available from Lineaccessori Fiat.

For any further details on installation/use, refer to the instruction manual for the child seat.

WARNING

Fit the child seat when the vehicle is stationary. The child seat is correctly anchored to the brackets when you hear the click. Follow the instructions for assembly, disassembly and positioning that the child seat manufacturer must supply.

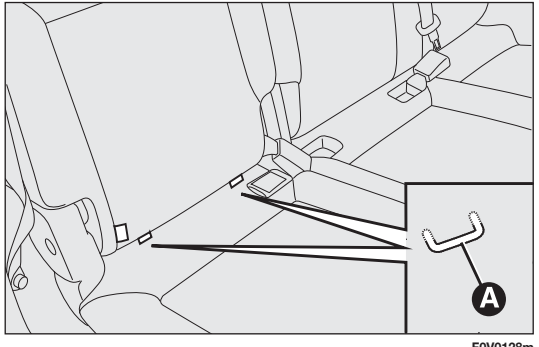

fig. 121

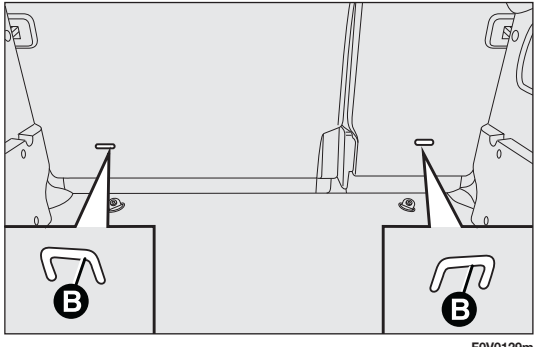

fig. 122

PASSENGER SEAT SUITABILITY FOR ISOFIX CHILD SEATS

The table below, in compliance with European Directive ECE 16, shows the different installation possibilities of Isofix restraint systems on seats fitted with Isofix fasteners.

Weight group	Orientation	Class seat	Isofix position Isofix size	Rear side
Group 0 up to 10 kg		Facing backwards	E	IL
Group 0+ 0 to 13 kg		Facing backwards	E	IL
		Facing backwards	D	IL
		Facing backwards	C	IL (*)
Group I from 9 to 18 kg		Facing backwards	D	IL
		Facing backwards	C	IL (*)
		Facing forwards	B	IUF
		Facing forwards	B1	IUF
		Facing forwards	A	IUF

IUF: suitable for forward-facing Isofix child restraint systems, universal class (fitted with third upper fastener), approved for the weight group.

IL: suitable for specific Isofix-type child restraint systems approved for this type of vehicle. The seat can be installed by moving the front seat forward.

(*) The Isofix child seat can be installed by lifting the headrest all the way up.

FRONT AIRBAGS

The vehicle is fitted with front airbags for the driver and, for versions/markets where provided, front airbags for the passenger.

FRONT AIRBAGS

The front driver/passenger airbags (for versions/markets where provided) have been designed to protect the front-seat occupants in the event of head-on crashes of medium-high severity, by placing the bag between the occupant and the steering wheel or dashboard.

Non-activation in other types of crash (side-on collisions, rear shunts, roll-overs, etc.) is therefore not a sign of system malfunction.

An electronic control unit causes the bag to inflate, if necessary, in the event of a head-on crash.

The bag will inflate instantaneously, placing itself between the front occupant's body and the structures which could cause injury. It will deflate immediately afterwards.

Front driver/passenger airbags (for versions/markets where provided) are not a replacement for, but rather a complement to, the seat belts, which should be worn at all times as specified by law in Europe and most non-European countries.

In the event of an impact, someone not wearing a seat belt could move forward and come into contact with a bag which is still in the opening phase. The protection offered by the bag is reduced in such a case.

The front airbags may not be activated in the following situations:

- ❒ head-on impacts against highly deformable objects that do not affect the vehicle's front surface (e.g. front wing hitting the guard rail);
- ❒ car getting wedged under other vehicles or protective barriers (e.g. trucks or guard rails);

they could not provide any additional protection compared with seat belts, so their activation would not be worthwhile. In these cases, non-deployment of the airbag does not necessarily indicate a system malfunction.

WARNING

Do not apply stickers or other objects to the steering wheel, the dashboard in the passenger side airbag area and the seats. Do not place objects (e.g. mobile phones) on the passenger side dashboard because these could interfere with the correct opening of the airbag and cause severe injury to occupants.

The front driver and passenger airbags are designed and calibrated to best protect front-seat passengers wearing seat belts.

The volume of the front airbags at maximum inflation fills most of the space between the steering wheel and the driver and between the dashboard and the passenger.

The airbags are not deployed in the event of small head-on collisions (for which the withholding action of the seat belts is sufficient). Seat belts must always be worn. In the event of head-on collisions, they ensure the correct positioning of the occupant.

FRONT AIRBAG ON DRIVER'S SIDE fig. 123

This consists of an instant-inflating bag contained in a special compartment in the centre of the steering wheel.

FRONT AIRBAG ON PASSENGER'S SIDE

fig. 124 (for versions/markets where provided)

This consists of an instant-inflating bag contained in a special compartment in the dashboard: this bag has a larger volume than that of the driver's.

WARNING

Do not put cradle seats facing backwards on the front seat if the passenger airbag is activated. Deployment of the airbag in an accident could cause fatal injuries to the child. Always deactivate the passenger airbag when placing a child seat on the front seat. Also, the passenger seat should be as far back as possible to avoid contact between the child seat and the dashboard. Although this is not mandatory by law, the airbag should be immediately reactivated when children are no longer carried to ensure better protection for adults.

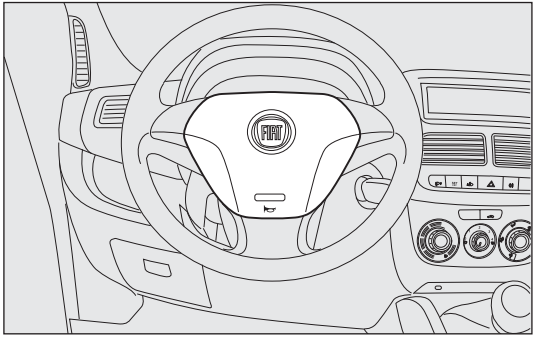

fig. 123

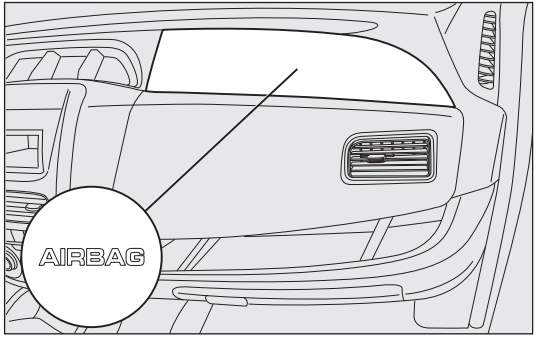

fig. 124

MANUAL DEACTIVATION OF FRONT AND SIDE PASSENGER AIRBAGS FOR HEAD AND TORSE PROTECTION

(for versions/markets where provided)

On Doblò M1 versions, whenever a child needs to be carried on the front seat, the passenger's front airbags and side bags for head and chest protection (for versions/markets where provided) can be deactivated.

The warning light on the instrument panel stays on until the passenger's front and side airbags for head and torse protection (for versions/markets where provided) are reactivated.

On Doblò Cargo versions with foldaway passenger seat and split, revolving partition or ladder, the passenger front airbags and the side bags for chest/head protection (for versions/markets where provided) need to be deactivated if a load is carried with the seat folded down.

IMPORTANT To manually deactivate the passenger's front and side airbags for head and torse protection (for versions/markets where provided), refer to "Digital display" and "Multifunction display" in the "Know your vehicle" section.

SIDE BAGS

(for versions/markets where provided)

On some versions, the vehicle may be fitted with driver and passenger front side airbags for head and torse protection.

Side bags protect occupants from side-on crashes of medium/high severity by placing the bag between the occupant and the internal parts of the side structure of the vehicle.

Non-activation of side bags in other types of collisions (head-on collisions, rear shunts, roll-overs, etc...) is not an indication of system malfunction.

An electronic control unit causes the bags to inflate in the event of a side-on collision. The bags inflate instantaneously, placing themselves between the occupant's body and the structures which could cause injury. They deflate immediately afterwards.

Side bags are not a replacement of, but rather a complement to, seat belts, which you are recommended to wear at all times, as specified by law in Europe and most non-European countries.

For this reason, the seat belt must be worn at all times. In the case of side-on collisions, the seat belts hold occupants in the correct position and prevent them from being thrown out of the car by a very violent collision.

SIDE BAGS fig. 125

(for versions/markets where provided)

They consist of an instant-inflating bag housed in the front-seat backrest and have the job of protecting the occupant's torso and head in the event of a side-on collision of medium/high severity.

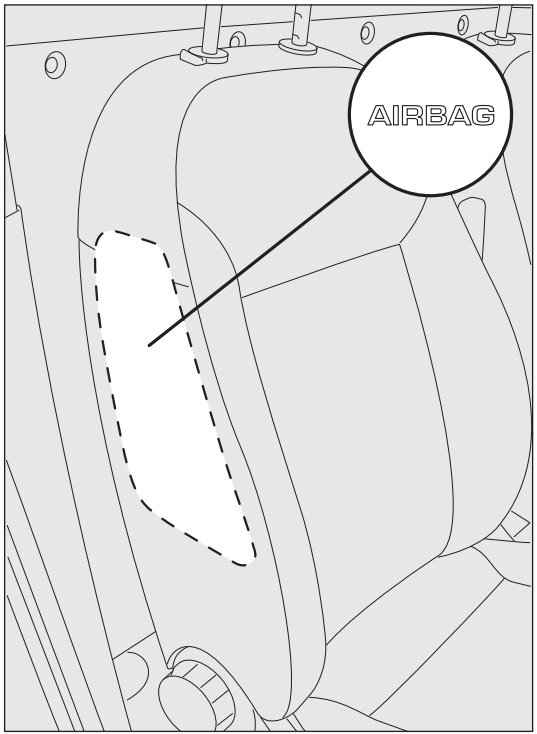

fig. 125

IMPORTANT The best protection in the event of side-on crash is achieved by maintaining a correct position on the seat. This allows the side bag to be correctly deployed.

IMPORTANT Do not wash the seats with water or pressurised steam (by hand or at automatic seat washing stations).

GENERAL WARNINGS

The front airbags and/or side bags (where provided) may be deployed if the vehicle is subject to heavy knocks or accidents involving the underbody area, such as for example violent shocks against steps, kerbs or low obstacles, or the vehicle falling into big potholes or depressions in the road.

A small amount of dust will be released when the airbags are deployed. The dust is not harmful and does not indicate the beginning of a fire. Furthermore, the surface of the deployed bag and the interior of the vehicle may be covered in a dusty residue: this may irritate your skin and eyes. Wash with mild soap and water in the event of exposure.

Should an accident occur in which any of the safety devices are activated, take the vehicle to a Fiat Dealership to have the activated devices replaced and to have the whole system checked.

Any airbag checks, repairs or replacements must be carried out at a Fiat Dealership.

If you are having the vehicle scrapped, have the airbag system deactivated at a Fiat Dealership first. If the vehicle changes ownership, the new owner must be informed of the method of use of the airbags and the above warnings and also be given this "Owner's Handbook".

Pretensioners, front airbags and front side bags are deployed differently according to the type of collision. Non-deployment of one or more of these devices does not therefore indicate a system fault.

WARNING

If the warning light does not turn on when the key is turned to MAR, or if it stays on when travelling (together with the message on the display on some versions), there could be a failure in the restraint systems. If this is the case, the airbags or pretensioners may not trigger in the event of an accident or, less likely, they may trigger accidentally. Before continuing your journey, contact a Fiat Dealership to have the system checked immediately.

WARNING

The expiry dates of the pyrotechnic charge and spiral contact are shown on the label in the glove box. When these dates approach, go to a Fiat Dealership to have the parts replaced.

WARNING

Never travel with objects on your lap, in front of your chest or with a pipe, pencil, etc. between your lips; serious injury may result if the airbag is triggered.

STARTING THE ENGINE

The vehicle is fitted with an immobiliser: if the engine fails to start, see the paragraph on "The Fiat CODE system" in the "Dashboard and controls" section.

The engine may be noisier during the first few seconds of operation, particularly after a long period of inactivity. This is due to the hydraulic tappets, the timing system chosen for petrol engine versions to reduce the number of servicing interventions, and affects neither functionality nor reliability.

It is advisable not to demand maximum performance from your vehicle (e.g. excessive acceleration, long distances at high speeds, excessive intense braking, etc.) during the initial period of use.

To avoid draining the battery, do not leave the ignition key in the MAR position when the engine is off.

WARNING

It is dangerous to run the engine in closed environments. The engine takes in oxygen and discharges carbon dioxide, carbon monoxide and other toxic gases.

STARTING PROCEDURE FOR PETROL VERSIONS

Proceed as follows:

- ❒ ensure that the handbrake is on;
- ❒ put the gear lever into neutral;
- ❒ fully depress the clutch pedal without touching the accelerator;
- ❒ turn the ignition key to AVV and let it go the moment the engine starts.

If the engine does not start at the first attempt, return the ignition key to STOP before repeating the procedure.

If, when the ignition key is at MAR, the instrument panel warning light remains on together with warning light , turn the key to STOP and then back to MAR; if the warning light remains on, try the other keys provided with the vehicle. If you still cannot start the engine, perform an emergency start (see "Emergency starting" in the "In an emergency" section) and go to a Fiat Dealership.

STARTING PROCEDURE FOR DIESEL VERSIONS

Proceed as follows:

❒ ensure that the handbrake is on;

❒ put the gear lever into neutral;

❒ turn the ignition key to MAR: the warning lights and on the instrument panel will turn on;

❒ wait for the warning lights and to turn off. The hotter the engine is, the quicker this will happen;

❒ fully depress the clutch pedal without touching the accelerator;

❒ turn the ignition key to AVV as soon as warning light goes out. Waiting too long will waste the heating work done by the glow plugs.

Release the key as soon as the engine starts.

IMPORTANT With the engine cold, the accelerator pedal must be fully released when you turn the ignition key to AVV.

If the engine does not start at the first attempt, return the ignition key to STOP before repeating the procedure.

If instrument panel warning light remains lit when the ignition key is at MAR, turn the key to STOP and then back to MAR; if the warning light remains lit, try the other keys provided with the vehicle. Contact a Fiat Dealership if the engine still does not start.

Warning light will flash for 60 seconds after starting or during prolonged cranking to indicate a fault in the glow plug preheating system. Use the vehicle normally if the engine starts, but go to a Fiat Dealership as soon as possible.

HOW TO WARM UP THE ENGINE AFTER IT HAS JUST STARTED

Proceed as follows:

❒ drive off slowly at medium revs, and accelerate smoothly;

❒ do not demand maximum performance for the first few kilometres. Wait until the engine coolant gauge starts moving.

EMERGENCY STARTING

If the instrument panel warning light stays on steadily, you can perform an emergency start by using the code on the CODE card (see the "In an emergency" section).

Never jump start the engine by pushing, towing or driving downhill. This could cause fuel to flow into the catalytic converter and damage it beyond repair.

STOPPING THE ENGINE

Turn the ignition key to STOP while the engine is idling.

IMPORTANT After a long drive, you should allow the engine to "catch its breath" before turning it off by letting it idle to allow the temperature in the engine compartment to fall.

HANDBRAKE

The handbrake is located between the two front seats.

Pull the lever upwards to engage the handbrake and ensure that the vehicle does not move.

WARNING

The vehicle should be secured after several clicks of the lever. If it is not, contact a FIAT Dealership to have it adjusted.

When the handbrake is on and the ignition key is at MAR, the instrument panel warning light (!) will come on.

Proceed as follows to release the handbrake:

❒ lift the lever slightly and press release button A-fig. 126;

❒ hold button A down and lower the lever. The (!) warning light on the instrument panel will go out.

Depress the brake pedal when carrying out this operation to prevent the vehicle from moving accidentally.

PARKING THE VEHICLE

Proceed as follows:

❒ stop the engine and engage the handbrake;

❒ engage a gear (first gear if parked uphill or reverse if facing downhill) and leave the wheels turned.

If the vehicle is parked on a steep slope, it is advisable to block the wheels with a wedge or stone.

To prevent draining the battery, do not leave the ignition key turned to MAR. Always remove the key when you leave the vehicle.

Never leave children unattended in the vehicle. Always remove the ignition key when leaving the vehicle, and take it with you.

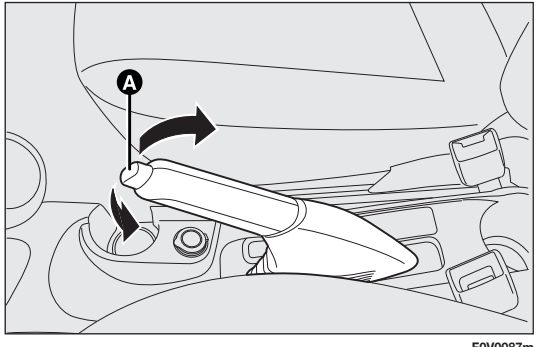

fig. 126

USING THE GEARBOX

To engage the gears, depress the clutch pedal fully and shift the gear lever A-fig. 127 into the required position (the diagram is shown on the gear knob fig. 127).

IMPORTANT Reverse may be engaged only when the vehicle is at a standstill. With the engine running, wait for at least 2 seconds with the clutch pedal fully depressed before engaging reverse to prevent damage to the gears and grating.

To engage reverse R from neutral, lift ring B under the knob and at the same time move the gearstick to the right and then backwards (as shown in the diagram).

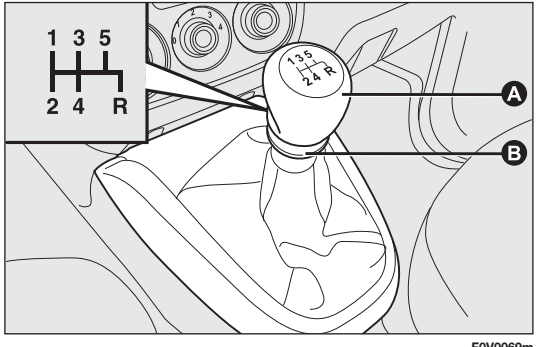

fig. 127

WARNING

Depress the clutch pedal fully to change gear correctly. Therefore, the floor area under the pedals should be clear: ensure that any rubber mats are flat and do not interfere with the pedals.

Do not drive with your hand resting on the gear lever, because this pressure, even if light, can wear out the inner components of the gearbox over time. The clutch pedal should be used only for gear changes. Do not drive with your foot resting on the clutch pedal, however slightly. For versions/markets where provided, the electronic clutch control could cut in by interpreting the incorrect driving style as a fault.

SAVING FUEL

Here are some useful tips to save fuel and minimise harmful emissions of CO_2 and other pollutants (nitric oxides, unburnt hydrocarbons, fine dusts etc…).

PRACTICAL ADVICE FOR REDUCING FUEL CONSUMPTION AND HARMFUL EMISSIONS

Vehicle conditions

1. Have checks **and adjustments** carried out in accordance with the "Scheduled Servicing Plan".
2. Check tyre pressures regularly, at least **once** every four weeks. Excessively low pressures will increase consumption because rolling resistance will be higher. In addition, this wears the tyre more quickly and impairs performance.
3. Only use **snow tyres** when the weather conditions make them absolutely necessary. They increase consumption and noise.
4. Do not travel **with a heavy load**: the weight of the vehicle (especially when driving in town) and its trim greatly affect fuel consumption and stability.

5. Remove **roof racks or ski racks** after use. These accessories reduce the vehicle's aerodynamic penetration and have a negative effect on fuel consumption.
6. It is better to use a trailer to transport particularly bulky objects.
7. Use the vehicle's air vents if possible: travelling with the windows open impairs the aerodynamics.
8. Only use electrical devices for the amount of time needed. The heated rear window, auxiliary headlights, windscreen wipers and fan heater use up a considerable amount of current, causing increased fuel consumption (up to +25% in the urban cycle).
9. Using the climate control leads to higher fuel consumption (on average up to +30%). If the temperature outside is not too extreme, try and use the air vents.

Driving style

1. After **starting the engine** you should drive away immediately and slowly, avoiding high revs. Do not warm up the engine at low or high revs when the vehicle is stationary; this causes the engine to warm up more slowly, thereby increasing fuel consumption, emissions and mechanical component wear.
2. Avoid **pointless actions** such as revving up when at traffic lights or before stopping the engine. The latter action, like double-declutching, is unnecessary and causes increased fuel consumption and pollution.
3. **Gear selection**: select a high gear as soon as possible (taking into account normal engine operation and traffic conditions) without pushing the engine to high revs during the intermediate gears. Using low gears at high revs to get lively acceleration increases fuel consumption, harmful emissions and engine wear.
4. **Vehicle speed**: fuel consumption increases exponentially as the speed of the vehicle increases. Keep your speed moderate and as even as possible, avoiding unnecessary braking and acceleration, which cause excessive fuel consumption and increased emissions. Keeping a safe distance from the vehicle in front helps to maintain a steady speed.
5. **Acceleration**: accelerating violently severely affects consumption and emissions. Acceleration should be gradual and should not exceed the maximum engine torque rate.

CONDITIONS OF USE

Cold starting

Short distances and frequent cold start-ups prevent the engine from reaching its optimum running temperature.

Consequently, both consumption (from +15 to +30% on the urban cycle) and emissions will increase.

Traffic and road conditions

Heavy traffic, for instance when travelling in a queue with frequent use of low gears or in cities with lots of traffic lights, causes fairly high fuel consumption. Mountain roads and uneven surfaces also have a negative effect on consumption.

Traffic hold-ups

During prolonged hold-ups (e.g. at level crossings) the engine should be switched off.

TOWING TRAILERS

IMPORTANT NOTES

The vehicle must be provided with a type-approved tow hitch and adequate electrical system to tow trailers. Installation must be performed by specialised personnel who will issue the required papers for travelling on roads.

Install any specific and/or additional rear-view mirrors in accordance with the highway code of the country in which you are travelling.

Remember that when towing a trailer, steep hills are harder to climb, braking distances increase and overtaking takes longer depending on the overall weight of the trailer.

Engage a low gear when driving downhill, rather than constantly using the brake.

The weight of the trailer on the vehicle tow hitch will reduce the loading capacity of the vehicle by the same amount.

Consider the weight at full load, including accessories and luggage, to make sure you do not exceed the maximum towable weight (shown in the log book).

Respect each country's speed limits for vehicles towing trailers. In all cases, the top speed must not exceed 80 km/h.

WARNING

The ABS with which the vehicle may be equipped will not control the braking system of the trailer. Particular caution is therefore required on slippery roads.

WARNING

Never modify the braking system of the vehicle to control the trailer brake. The trailer braking system must be fully independent from the hydraulic system of the vehicle.

SNOW TYRES

A Fiat Dealership will be happy to provide advice concerning the most suitable type of tyre for the customer's requirements.

For the type, pressures and specifications of the snow tyre to be used, follow carefully the instructions given in the "Wheels" paragraph of the "Technical specifications" section.

The winter performance of these tyres is considerably reduced when the tread thickness is less than 4 mm. If this is the case, replace them.

Due to their specific features, the performance of snow tyres is much lower than that of standard tyres in normal conditions or on long motorway stretches. You should therefore use them only in the conditions for which they were designed.

IMPORTANT When using snow tyres with a maximum speed index below the one that can be reached by the vehicle (increased by 5%), place a notice in the passenger compartment, plainly in view, which states the maximum speed allowed by the snow tyres (as per EC Directive).

All four tyres should be the same (brand and profile) to ensure greater safety when driving and braking as well as making the car more responsive.

Remember that you should not change the rotation direction of the tyres.

WARNING

You must not exceed 160 km/h on snow tyres with a "Q" mark; in any case, make sure you stick to the rules of the highway code.

SNOW CHAINS

The use of snow chains should be in compliance with local regulations.

Snow chains may be fitted only to the front wheel tyres (drive wheels).

Check the tension of the chains after the first few metres have been driven.

Keep your speed down when snow chains are fitted – do not exceed 50 km/h. Avoid potholes, steps and pavements and also avoid driving for long distances on roads not covered with snow to avoid damaging the car and the road surface.

VEHICLE INACTIVITY

If the vehicle needs to be off the road for longer than one month, the following precautions must be taken:

- ❒ park the vehicle indoors in a dry and, if possible, well-ventilated place;
- ❒ engage a gear and check that the handbrake is not on;
- ❒ disconnect the negative terminal from the battery pole (see paragraph “Vehicle inactivity” in the "Dashboard and controls" chapter) and check the charge conditions (see paragraph “Battery” in the “Care and maintenance” chapter);
- ❒ clean and protect the painted parts using protective wax;
- ❒ clean and protect the shiny metal parts using special compounds readily available;
- ❒ sprinkle talcum powder on the rubber windscreen and rear window wiper blades and lift them off the glass;
- ❒ open the windows slightly;
- ❒ cover the vehicle with a piece of fabric or perforated plastic sheet; Do not use compact plastic tarpaulins, which prevent humidity from evaporating from the surface of the vehicle;
- ❒ inflate tyres to a pressure of +0.5 bar above the normal specified pressure and check regularly;
- ❒ do not drain the engine cooling system.

WARNING LIGHTS AND MESSAGES

GENERAL WARNINGS

Warning lights are accompanied by a specific message and/or sound when applicable. These indications are brief and precautionary and as such must not be considered as exhaustive and/or alternative to the information contained in the Owner's Handbook, which you are recommended to read carefully in all cases. Always refer to the information in this chapter in the event of a failure indication.

IMPORTANT The fault indicators appearing on the display are divided into two categories: very serious and less serious failures.

Very serious failures prompt a prolonged cycle of signals.

Less serious failures prompt a shorter cycle of signals.

Press SET ESC to stop the warning cycle in both cases. Warning lights (or the symbol on the display) on the instrument panel will stay on until the cause of the failure is eliminated.

BRAKE FLUID LOW (red)
HANDBRAKE ON (red)

When the ignition key is turned to MAR, the warning light turns on but should go off after a few seconds.

Brake fluid low

The warning light turns on when the level of the brake fluid in the reservoir falls below the minimum level, possibly due to a leak in the circuit.

On some versions the display shows the associated message.

WARNING

If the warning light (!) turns on when travelling (on certain versions together with the message on the display), stop the car immediately and contact a Fiat Dealership.

Handbrake on

The warning light turns on when the handbrake is engaged.

On certain versions, there is also an audible warning if the vehicle is moving.

IMPORTANT If the warning light turns on when travelling, check that the handbrake is not engaged.

AIRBAG FAILURE (red)

Turning the key to the MAR position illuminates the warning light, but it will switch off after a few seconds. The warning light stays on constantly if there is a failure in the airbag system. A specific message is displayed on certain versions.

WARNING

If the warning light does not come on when turning the key to MAR or stays on during car travel, a failure may be present in the restraint systems. If this is the case, the airbags or pretensioners may not be deployed after an impact or, less likely, they may be deployed accidentally. Before continuing your journey, contact a Fiat Dealership to have the system checked immediately.

WARNING

The failure of warning light is indicated by warning light flashing for longer than the usual four seconds, thus signalling that the front passenger airbag is deactivated. In addition, the airbag system automatically disables the airbags on the passenger's side (both front and side airbags where provided). In this case, warning light may not be indicating that there is a fault in the restraint systems. Before driving off, contact a Fiat Dealership to have the system checked immediately.

PASSENGER/SIDE AIRBAGS DEACTIVATED (amber)

The warning light comes on when the front passenger airbag and the side bag (for versions/markets where provided) are disabled. With the front passenger airbags enabled, when the ignition key is turned to MAR the warning light comes on steadily for about four seconds, flashes for another four seconds and then should go out.

WARNING

Failure of the warning light is indicated by warning light coming on. In addition, the airbag system automatically disables the airbags on the passenger's side (both front and side airbags where provided). Before driving off, contact a Fiat Dealership to have the system checked immediately.

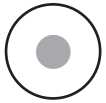

OVERHEATED ENGINE COOLANT (red)

When the ignition key is turned to MAR, the warning light turns on but should go off after a few seconds.

The warning light turns on when the engine is overheated.

If the warning light comes on, proceed as follows:

- when driving normally: stop the vehicle, switch off the engine and check that the water level in the reservoir is not below the MIN mark. If it is not, wait for a few minutes for the engine to cool down then slowly and carefully open the cap, top up with coolant and check that the level is between the MIN and MAX marks. Also visually check for leaks. Go to a Fiat Dealership if the warning light comes on again when the engine is next started.
- if the vehicle is used under demanding conditions (e.g. towing trailers uphill or fully loaded): slow down and, if the light stays on, stop the vehicle. Stop for two or three minutes with the engine running and slightly accelerated to assist better coolant circulation. Then switch the engine off. Check the correct fluid level as described previously.

IMPORTANT On demanding routes, it is advisable to keep the engine on and slightly accelerated for a few minutes before switching it off.

A specific message is displayed on certain versions.

BATTERY CHARGE LOW (red)

The warning light comes on when the ignition key is turned to MAR, but it should go out as soon as the engine has started (with the engine running at idle speed a brief delay before going out is acceptable).

If the warning light stays on, contact a Fiat Dealership immediately.

ABS SYSTEM FAILURE (amber)

When the ignition key is turned to MAR, the warning light turns on but should go off after a few seconds.

The warning light comes on when the system is either not working properly or not available. Under these circumstances, the braking system will work as normal but without the extra performance offered by the ABS system. Drive carefully and go to a Fiat Dealership as soon as possible.

A specific message is displayed on certain versions.

HILL HOLDER FAILURE (amber)

(for versions/markets where provided)

Turning the key to the MAR position illuminates the warning light, but it will switch off after a few seconds.

The warning light turns on to indicate a Hill Holder system fault. In this case, contact a Fiat Dealership as soon as possible. On some versions, the fault is signalled by warning light coming on together with the relevant message on the display.

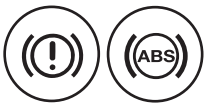

EBD FAULT (red) (amber)

Warning lights and lit at the same time with the engine running indicates an EBD system failure or that the system is not available. This may cause premature locking of the rear wheels in the event of violent braking, causing the vehicle to swerve. Drive very carefully to a Fiat Dealership to have the system inspected immediately.

On some versions the display shows the associated message.

ESP SYSTEM FAILURE (amber)

(for versions/markets where provided)

When the ignition key is turned to MAR, the warning light turns on but should go off after a few seconds.

If the warning light does not go off, or stays on together with the LED on the ASR OFF button when travelling, contact a Fiat Dealership.

A specific message is displayed on certain versions.

NB The warning light flashing while driving indicates that the ESP system is active.

CONTINUOUSLY ON:
ENGINE OIL PRESSURE LOW (red)

FLASHING:
ENGINE OIL DEGRADED (only Multijet versions with DPF – red)

When the ignition key is turned to MAR, the warning light switches on, but it should go out as soon as the engine is started.

1. Engine oil pressure low

The warning light turns on and stays on constantly along with a message on the display (in versions/markets where provided) when the system detects that engine oil pressure is low.

WARNING

If the warning light turns on when the car is travelling (on certain versions together with the message on the display), stop the car immediately and contact a Fiat Dealership.

2. Engine oil degraded (only Multijet versions with DPF)

The warning light will flash and a specific message will appear on the display (for versions/markets where provided). The warning light may flash in the following ways, depending on the version:

– for one minute every two hours;

– for three minute cycles with the warning light off for intervals of five seconds until oil is changed.

After the initial warning, each time the engine is started up, the warning light will continue to flash in the same ways as described above, until the oil is changed. A specific message will appear on the display (for versions/markets where provided) in addition to the warning light.

If the warning light flashes, this does not mean that the vehicle is defective, but simply informs the driver that it is now necessary to change the oil as a result of regular vehicle use.

Note that engine oil degrades faster under the following circumstances:

– mainly town use of the vehicle which makes the DPF regeneration process more frequent

– use of the vehicle for short journies, preventing the engine from reaching operating temperature

– repeated interruption of the regeneration process, signalled by the DPF warning light coming on.

WARNING

Degraded engine oil should be replaced as soon as possible after the warning light comes on, and never more than 500 km after it first comes on. Failure to change the oil within the first 500 km may result in severe damage to the engine and invalidate the warranty. Remember that when the warning light comes on, it does not mean that the level of engine oil is low, so if the light flashes you do not need to top up the engine oil.

SEAT BELT NOT FASTENED (red)

The warning light on the panel comes on steadily when the vehicle is stationary and the driver's seat belt is not correctly fastened. It will flash, and be accompanied by an audible warning, if the front seat belts are not correctly fastened when the vehicle is moving.

The SBR (Seat Belt Reminder) system's audible warning can be disabled only by a Fiat Dealership.

On some versions, the system can be reactivated from the setup menu.

DOOR OPEN (red)

On certain versions, the warning light turns on when one or more doors, the boot or the bonnet are not properly closed.

A specific message is displayed on certain versions.

You will hear a warning sound if a door is open and the vehicle is moving.

ENGINE OIL LOW (red)

When turning the ignition key to MAR, the warning light turns on but it should go off after a few seconds.

This warning light appears on the panel when the engine oil level falls below the minimum recommended value. Restore the correct engine oil level (see "Checking fluid levels" in the "Servicing and maintenance" section).

A specific message is displayed on certain versions.

INJECTION SYSTEM FAILURE (Multijet versions – amber)

EOBD ENGINE MANAGEMENT SYSTEM FAILURE (petrol versions – amber)

Injection system failure

Under normal conditions, turning the ignition key to MAR, the warning light turns on but it should go off after the engine starts. If the warning light stays on or comes on when travelling, it means there is a fault in the injection system which could cause loss of performance, poor handling and high fuel consumption levels.

A specific message is displayed on certain versions.

Under these conditions, the vehicle can continue travelling at moderate speed without demanding excessive effort from the engine. In any case, you should go to a Fiat Dealership as soon as possible.

EOBD engine management system failure

Under normal conditions, turning the ignition key to MAR, the warning light turns on but it should go off after the engine starts.

This indicates that the warning light is working correctly. If the warning light either stays on or comes on during your journey:

- on permanently: this means there is a fault in the supply/ignition system which could cause high exhaust emissions, loss of performance, poor handling and high fuel consumption levels.

  A specific message is displayed on certain versions.

  Under these conditions, the vehicle can continue travelling at moderate speed without demanding excessive effort from the engine. Prolonged use of the vehicle with the warning light on may cause damage. Go to a Fiat Dealership as soon as possible.

  The warning light goes out after the fault disappears, but the notification is stored in the system.

- flashing: this indicates possible damage to the catalytic converter (see "EOBD system" in the "Dashboard and controls" section).

  If the light flashes, come off the accelerator pedal to reduce engine revs until the warning light stops flashing; continue the journey at moderate speed, trying to avoid driving conditions that may cause further flashing, and get to a Fiat Dealership as soon as possible.

Go to a Fiat Dealership as soon as possible if warning light does not light up when the key is turned to MAR or if, while travelling, the warning light comes on either permanently or flashing (along with a message on the display on certain versions). The operation of the warning light may be checked by traffic police using appropriate equipment. Respect the regulations in force in the country where you are driving.

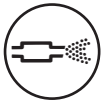

DPF (PARTICULATE FILTER) CLEANING IN PROGRESS (only Multijet versions with DPF – amber)

When the ignition key is turned to MAR, the warning light turns on but should go off after a few seconds. The warning light stays on constantly to notify the driver that the DPF system needs to eliminate captured pollutants (particulate) by the regeneration process.

The warning light does not come on during every DPF regeneration, but only when driving conditions require notification to the driver.

The warning light will go off if the vehicle stays in motion until regeneration has been completed. The process normally takes about 15 minutes. Optimum conditions for completing the process are achieved by travelling at 60 km/h with engine revs above 2000 rpm.

If this warning light comes on, it does not mean the vehicle is defective, so there is no need to take it to a garage. A specific message will appear on the display when the warning light comes on (for versions/markets where provided).

WARNING

Always drive at a speed appropriate to the traffic conditions, the weather and speed limits. The engine may be turned off while the DPF light is on; however, repeated interruption of the regeneration process may result in premature degradation of the engine oil. For this reason, it is always advisable to wait for the light to go off before turning off the engine, following the instructions appearing above. It is recommended to complete DPF regeneration with the vehicle stationary.

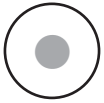

FUEL RESERVE (amber)

When the ignition key is turned to MAR, the warning light turns on but should go off after a few seconds.

The warning light turns on when 8-10 litres of fuel are left in the tank.

IMPORTANT The warning light will blink to indicate a system failure. If this happens, go to a Fiat Dealership to have the system checked.

GLOW PLUG PREHEATING (Multijet versions – amber)

GLOW PLUG PREHEATING FAULT (Multijet versions – amber)

Glow plugs preheating

This warning light comes on when the key is turned to MAR. It will go out as soon as the glow plugs have reached a preset temperature. Start the engine as soon as the warning light goes out.

IMPORTANT In hot outside temperatures, the warning light may stay on for only a very short time.

Glow plug preheating fault

The warning light flashes if there is a fault in the preheating system. Go to a Fiat Dealership as soon as possible.

A specific message is displayed on some versions.

WATER IN DIESEL FILTER (Multijet versions – amber)

When the ignition key is turned to MAR, the warning light turns on but should go off after a few seconds.

The warning light turns on when there is water in the diesel filter. A specific message is displayed on certain versions.

The presence of water in the fuel supply circuit may cause severe damage to the injection system and irregular engine operation. If warning light comes on (with a message on the display on some versions), go to a Fiat Dealership as soon as possible to have the system bled. Water may have entered the tank if this appears immediately after refuelling: if this happens, switch the engine off immediately and contact a Fiat Dealership.

FIAT CODE VEHICLE PROTECTION SYSTEM FAILURE (amber)

Warning light may come on (and a message on the display may appear on certain versions) to indicate that there is a fault in the Fiat Code system or, if applicable, the alarm system; in this case, contact a Fiat Dealership as soon as possible.

EXTERIOR LIGHTS FAULT (amber)

The warning light comes on (on some versions) when a failure is detected in one of the following lights:

– sidelights/taillights

– daytime running lights

– brake lights

– rear fog lights

– direction indicators

– number plate lights.

The failure relating to these lights could be: one or more blown bulbs, a blown protection fuse or a break in the electrical connection.

On certain versions, warning light ⚠ turns on as an alternative.

A specific message is displayed on certain versions.

GENERIC WARNING (amber)

The warning light turns on in the following circumstances:

Engine oil pressure sensor failure

The warning light turns on when a failure is detected in the engine oil pressure sensor.

Go to a Fiat Dealership to have the fault fixed as soon as possible.

Exterior lights failure
(for versions/markets where provided)

See the section on warning light .

Fuel cut-off switch tripped

The warning light comes on when the fuel cut-off switch is triggered.

A specific message is displayed on certain versions.

Parking sensor fault
(for versions/markets where provided)

See the section on warning light P.

Start&Stop system fault
(for versions/markets where provided)

The warning light comes on when a failure is detected in the Start&Stop system.

BRAKE PADS WORN (amber)

The warning light comes on if the front brake pads are worn; in this case, have them changed as soon as possible.

A specific message is displayed on certain versions.

PARKING SENSOR FAULT (amber)
(for versions/markets where provided)

The warning light turns on when a failure is detected in the parking sensors.

On certain versions, warning light ⚠ turns on as an alternative. In this case, contact a Fiat Dealership.

A specific message is displayed on certain versions.

START&STOP SYSTEM FAILURE (amber)
(for versions/markets where provided)

The warning light comes on when a failure is detected in the Start&Stop system. On certain versions, warning light ⚠ turns on as an alternative.

In this case, contact a Fiat Dealership.

A specific message is displayed on certain versions.

SIDE LIGHTS AND TAILLIGHTS (green)

FOLLOW ME HOME (green)

Side lights/taillights

The warning light comes on when the side/taillights are turned on.

Follow Me Home

The warning light will turn on when this device is active (see "Follow Me Home" in the "Dashboard and controls" section).

A specific message appears on the display.

FRONT FOG LIGHTS (green)

The warning light comes on when the front fog lights are turned on.

REAR FOG LIGHTS (amber)

The warning light comes on when the rear fog lights are turned on.

CRUISE CONTROL (green) (for versions/markets where provided)

The warning light turns on, together with a message on the display, when the cruise control twist switch is turned to ON.

LEFT-HAND DIRECTION INDICATOR (green – intermittent)

The warning light turns on when the direction indicator stalk is moved downwards or, together with the right indicator, when the hazard lights button is pressed.

RIGHT-HAND DIRECTION INDICATOR (green – intermittent)

The warning light turns on when the direction indicator stalk is moved upwards or, together with the left indicator, when the hazard lights button is pressed.

MAIN BEAM HEADLIGHTS (blue)

The warning light comes on when the main beams are turned on.

ASR SYSTEM
(versions with multifunction display)
(for versions/markets, where provided)

The ASR system can be turned off by pressing the button ASR OFF.

The display will show a specific message to warn the driver that the system is off; at the same time, the button LED will turn on.

When you press ASR OFF again, the button LED will turn off and the display will show a specific message to inform you that the system is on again.

GEAR SHIFT INDICATOR
(for versions/markets where provided)

On vehicles with a manual gearbox, the gear shift indicator suggests gear changes to the driver (SHIFT UP or SHIFT DOWN) via a special display on the control panel. This suggestion to change gear is designed to improve consumption and ensure the best driving style.

NB The sign on the instrument panel remains on until the driver changes gear or until the driving conditions return to a situation where a gear change is not required to reduce consumption.

IN AN EMERGENCY

In an emergency, we recommend that you call the freephone number found in the Warranty Booklet. You can also go to the www.fiat.com website to find your nearest Fiat Dealership.

STARTING THE ENGINE

EMERGENCY STARTING

If the instrument panel warning light stays on permanently, contact a Fiat Dealership immediately.

JUMP STARTING

If the battery is flat, the engine may be started using an auxiliary battery with an equal or slightly higher capacity than the flat one.

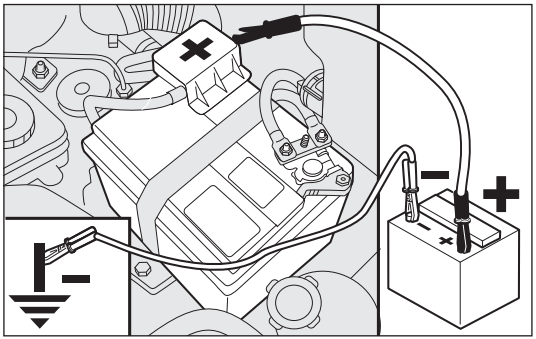

fig. 128

To do so, proceed as follows (fig. 128):

- ❒ connect the positive terminals (+ sign near the terminal) of the two batteries with a jump lead;
- ❒ with a second lead, connect the negative terminal (–) of the auxiliary battery to an earthing point on the engine or the gearbox of the car to be started;
- ❒ start the engine.
- ❒ when the engine has been started, follow the sequence above in reverse order to remove the leads.

If after a few attempts the engine does not start, do not keep trying but contact a Fiat Dealership.

IMPORTANT Do not directly connect the negative terminals of the two batteries: sparks could ignite explosive gas released from the battery. If the auxiliary battery is installed on another vehicle, prevent accidental contact between metallic parts of the two vehicles.

Strictly avoid using a rapid battery charger for jump starting: this could damage the system electronics and the ignition and engine supply control units.

WARNING

This procedure must be performed by experts because incorrect actions may cause considerable electrical discharge. Furthermore, battery fluid is poisonous and corrosive: avoid contact with skin and eyes. Keep naked flames and lit cigarettes away from the battery. Do not create sparks.

BUMP STARTING

Never bump start the engine by pushing, towing or driving downhill. This could cause fuel to flow into the catalytic converter and damage it beyond repair.

IMPORTANT Remember that the brake booster and the power steering system are not active until the engine is started, so you will need to apply much more force to the brake pedal or steering wheel.

CHANGING A TYRE

The vehicle is originally equipped with the Fix&Go automatic quick tyre repair kit (see instructions in the next section). As an alternative, the vehicle may have a normal-sized spare wheel.

Wheel changing and correct use of the jack and spare wheel call for some precautions, as listed below.

WARNING

The spare wheel (where provided) is specifically for your vehicle. Therefore, it must not be used on other models. Do not use spare wheels of other models on your vehicle. The spare wheel should be used only in an emergency. Use it as little as possible.

WARNING

Use your hazard lights, warning triangle, etc to show that your car is stationary. Passengers should get out of the car, particularly if it is heavily loaded, and wait for the wheel to be changed away from the traffic. If you are on a steep slope or uneven surface, place wedges or other suitable objects under the wheels to secure the vehicle. Repair and refit the standard wheel as soon as possible. Do not grease the bolt threads before you fit them, because they could suddenly come loose.

WARNING

Use the jack only to replace wheels on the vehicle with which it is supplied or on other vehicles of the same model. Never use the jack for other purposes, such as lifting other models. Never use the jack to carry out repairs under the vehicle. Incorrect positioning of the jack may cause the lifted vehicle to fall. Do not use the jack for loads higher than the one shown on its label.

WARNING

Incorrect hub cap assembly may cause it to come off when the car is moving. Never tamper with the inflation valve. Never introduce tools of any kind between the rim and the tyre. Check tyre and spare wheel pressures regularly, referring to the values shown in the "Technical specifications" section.

Important notes:

❒ the jack weighs 4 kg;

❒ the jack requires no adjustment;

❒ the jack cannot be repaired; if it breaks, it must be replaced with a new one of the same type;

❒ no tool other than the cranking handle may be fitted on the jack.

To change a tyre, proceed as follows:

❒ stop the vehicle in a position where it is not a danger for other traffic and where you can replace the wheel safely. The ground should be flat and solid;

❒ turn the engine off and engage the handbrake;

❒ engage first gear or reverse;

❒ wear the reflective safety jacket (compulsory by law) before getting out of the vehicle;

❒ indicate that the vehicle is parked up by using the devices required by law in the country in which you are travelling (e.g. warning triangle, hazard lights etc.);

❒ for Cargo versions fig. 129: move the left front seat forwards using lever A to take the tool box and place it near the tyre to be changed;

❒ for Doblò/Doblò Combi versions fig. 130: open the rear doors and take the tool box from the compartment in the rear right side panel by releasing the elastic strap from the buckle; place the tool box near the tyre to be changed;

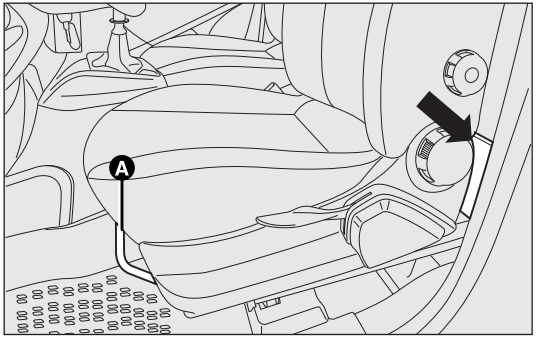

F0V0149m

fig. 129

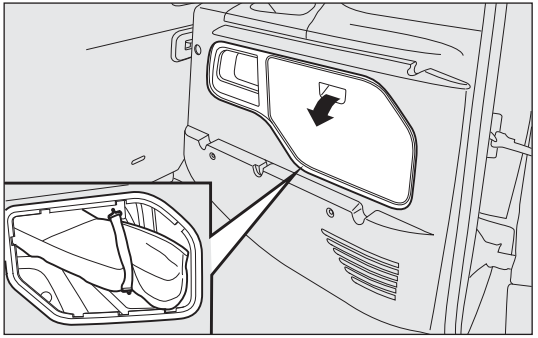

F0V0148m

fig. 130

❒ take wheel wrench B and the extension with pentagonal fitting C; inside the load area, fit extension C on bolt A; use tool B to lower the wheel by unwinding the wire;

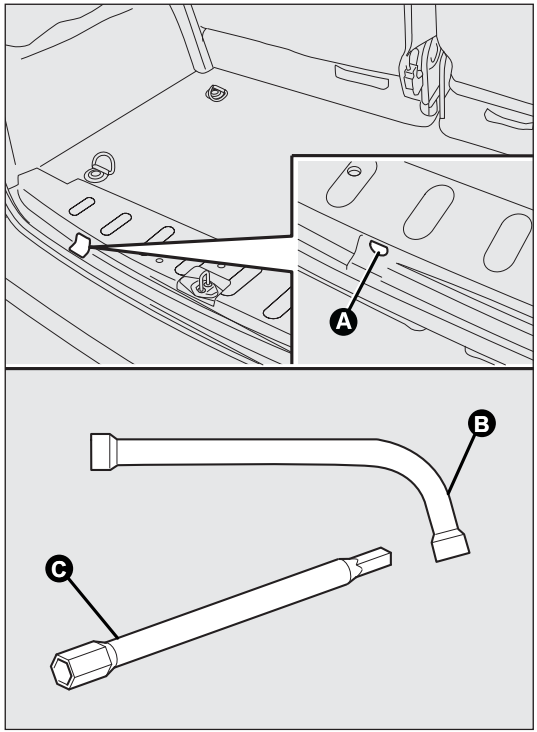

F0V0150m

fig. 131

❒ use wheel wrench B to drag the wheel from under the vehicle fig. 132;

❒ unscrew knob D and free the wheel from bracket E by detatching it from the hole in the rim;

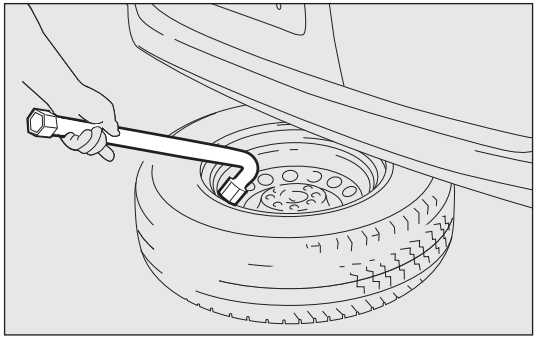

F0V0151m

fig. 132

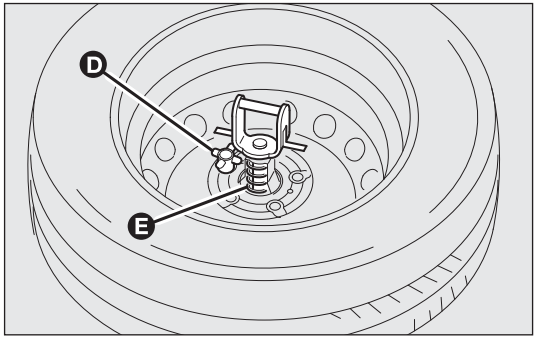

F0V0193m

fig. 133

- ❒ for versions with alloy wheels, remove the snap-fitted hubcap;
- ❒ loosen the fastening bolts of the wheel to be replaced by about one turn, using the wrench provided;
- ❒ remove wedge D from the tool box and open it as shown in fig. 134a;
- ❒ place the wedge D behind the wheel diagonally opposite the one you want to replace fig. 134b to prevent the vehicle from moving when it is raised.
- ❒ operate the jack using the handle (remove the crank from the clip and from the hole in the nut) to partially extend it fig. 135, then arrange it under the vehicle at references A-fig. 136 near the tyre to be changed.

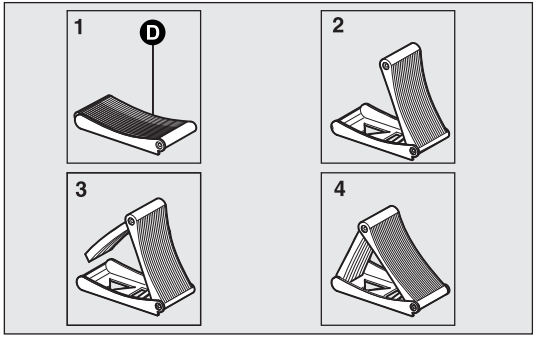

F0V0192m

fig. 134a

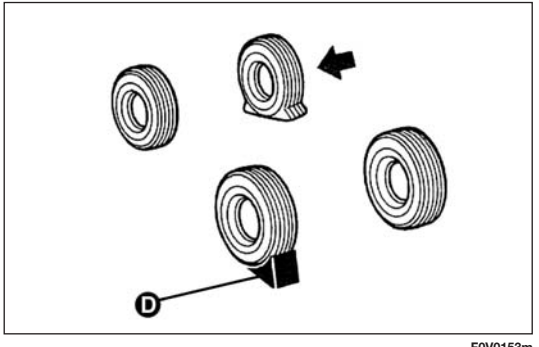

F0V0153m

fig. 134b

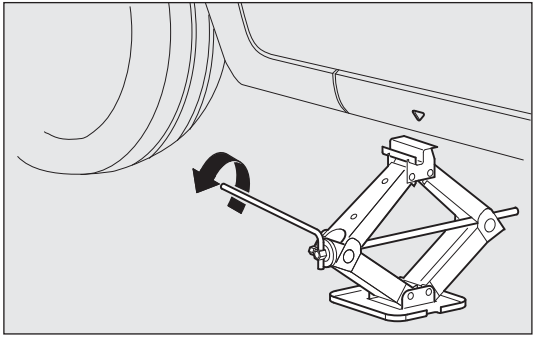
F0V0154m

fig. 135

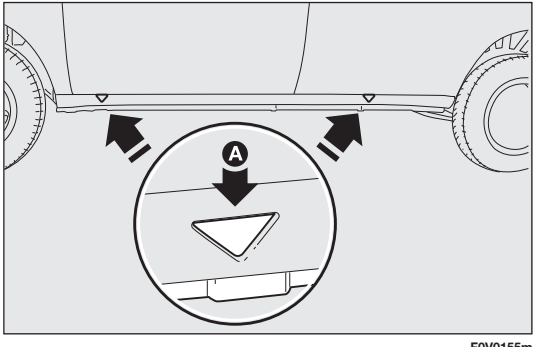

F0V0155m

fig. 136

❒ operate the jack with the handle and extend it so that groove A-fig. 137 of the jack fits correctly onto lower profile B on the sidemember;

❒ warn anybody nearby that the vehicle is about to be lifted. They must stay clear and not touch the vehicle until it is back on the ground.

❒ introduce the handle by pushing it into the hole in the nut and into the plastic clip, operate the jack and lift the vehicle until the wheel is a few centimetres off the ground. When turning the crank, ensure that it rotates freely in order to avoid grazing your hands against the ground. The moving components of the jack (screws and joints) can also cause injuries, so do not touch them. Clean yourself thoroughly if you come into contact with lubricating grease;

❒ loosen the fastening bolts completely and then remove the wheel;

❒ make sure the contact surfaces between spare wheel and hub are clean so that the fastening bolts will not come loose;

❒ fit the standard wheel by inserting the first bolt two threads B-fig 138 into the hole closest to the inflation valve A;

❒ fit the hubcap, making sure that the symbol aligns with the inflation valve, and then insert the other three bolts.

❒ tighten the bolts using the wrench provided;

❒ turn the jack handle to lower the vehicle, and remove the jack;

❒ use the wrench provided to tighten the bolts in a criss-cross fashion in the order shown in fig. 139.

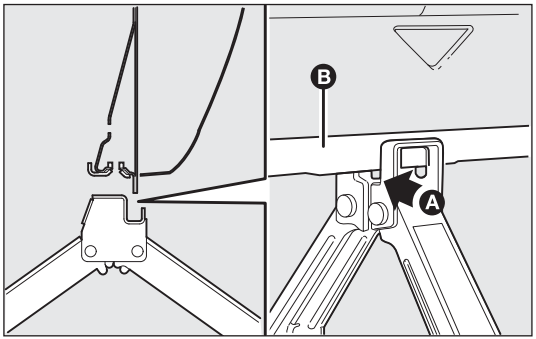

F0V0156m

fig. 137

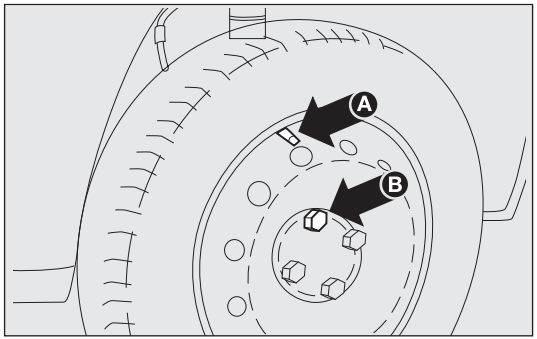

F0V0157m

fig. 138

After tyre replacement

❒ fix bracket A-fig. 140 to the wheel after passing it through the hole, insert the threaded pin into one of the bolt holes and secure by tightening knob B;

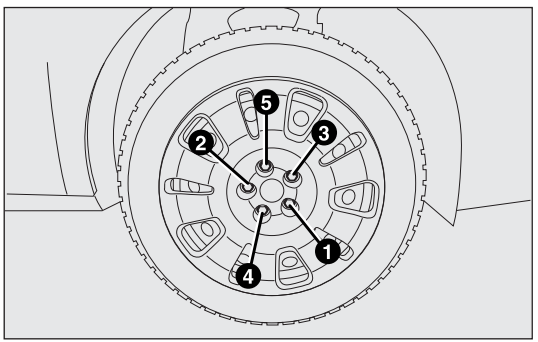

F0V0158m

fig. 139

❒ for vehicles with alloy rims take the adapter D and fit the plastic spacer C between the spring and the flange of the bracket. The plastic fin must be directed downwards and perfectly coincide with the flange cut part;

– fit the bracket E in the adapter D, fit the pin in the hole and fasten by the knob F;

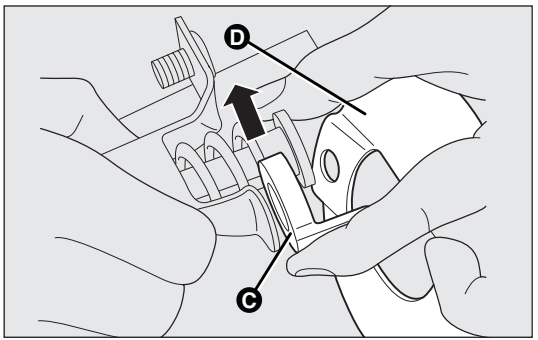

F0V0214m

fig. 140a

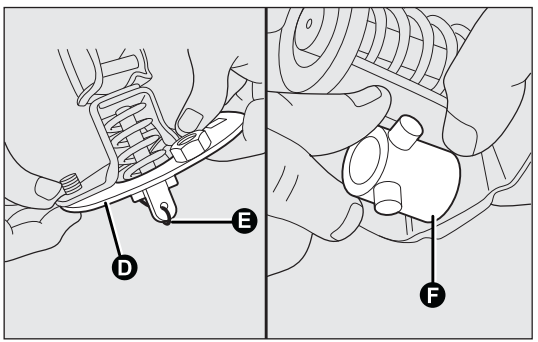

F0V0215

fig. 140b

– position the wheel vertically and lay the mounted adapter on the inner part of the rim, using the supplied screws fasten the wheel to the adapter using the bolt inlet wrench G. Tighten the screws with the wheel removal wrench

NOTE Use the spare wheel covering bag to protect the replaced alloy wheel

❒ check that the wheel is stored correctly in the underfloor housing (the friction of the lifting system limits how far the wheel can travel. Incorrect positioning may compromise safety);

❒ put the jack and the other implements back in the tool box.

❒ position the tool box behind the left seat (Cargo versions) or inside the compartment in the rear right side panel by resting the base of the box on the side (Doblò/Doblò Combi versions).

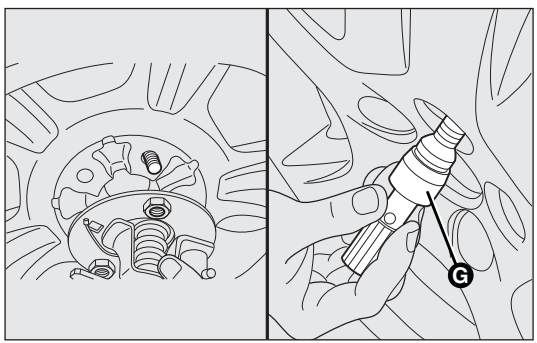

F0V0216m

fig. 140c

Automatic FIX&GO QUICK TYRE REPAIR KIT

The automatic Fix & Go quick tyre repair kit is contained in a specific bag located under the left seat (Cargo versions) or inside the compartment in the rear right side panel.

The kit includes fig. 141:

❒ a canister A, containing sealant, which is fitted with:

– filler tube B;

– an adhesive label C with the message "max. 80 km/h" to be placed where the driver can easily see it (on the dashboard) after repairing the tyre;

❒ a compressor D complete with pressure gauge and fittings.

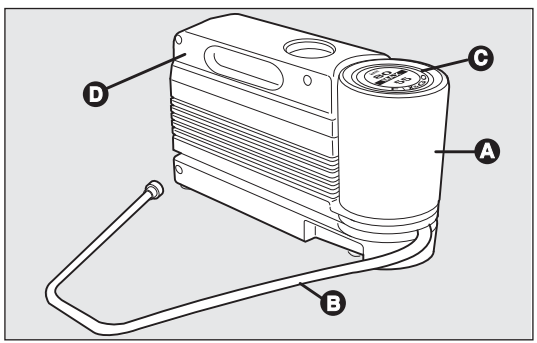

F0V0093m

fig. 141

❒ instruction booklet (see fig. 142), used to ensure the correct use of the quick tyre repair kit and then given to whoever will handle the treated tyre;

❒ a pair of protective gloves located in the side part of the compressor;

❒ adapters for inflating different elements.

WARNING

Hand over the instruction booklet to the personnel charged with treating the tyre repaired with the kit.

In the event of a puncture caused by foreign bodies, it is possible to repair tyres showing holes on the track or shoulder of up to 4 mm in diameter.

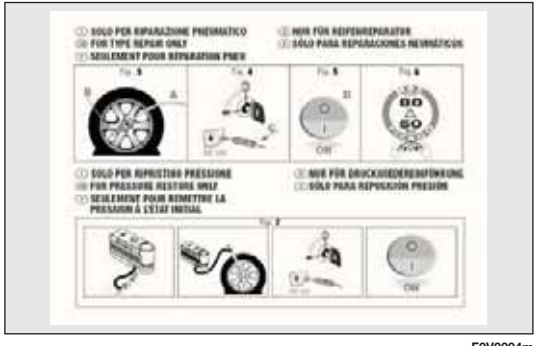

F0V0094m

fig. 142

IMPORTANT INFORMATION:

The sealing fluid of the quick tyre repair kit is effective at external temperatures of between -20 °C and +50 °C.

WARNING

Do not operate the compressor for longer than 20 minutes at a time. Risk of overheating. The quick repair kit is not suitable for permanent repairs. The tyres repaired must therefore be used only temporarily.

Do not dispose of the cylinder and sealant in the open environment. Dispose of them according to the national and local laws in force.

WARNING

It is not possible to repair damage to the tyre sidewall. Do not use the quick repair kit if the damage has been caused by travelling on a flat tyre.

WARNING

If the wheel rim is damaged (the channel is so deformed as to cause an air leakage) it cannot be repaired. Do not remove foreign bodies (screws or nails) from the tyre.

WARNING

The cylinder contains ethylene glycol. It contains latex, which may cause an allergic reaction. Harmful if swallowed. Irritates the eyes. There could be a reaction in case of inhalation or contact. Avoid contact with your eyes, skin and clothes. In the event of contact, wash immediately with plenty of water. Do not induce vomiting if swallowed. Rinse your mouth out and drink plenty of water. Call a doctor immediately. Keep out of the reach of children. The product must not be used by asthmatics. Do not breathe in the vapours during insertion and suction. Call a doctor immediately if allergic reactions are noted. Store the canister in its proper compartment, away from sources of heat. The sealant has an expiry date. Replace the cylinder if its sealant is out of date.

INFLATION PROCEDURE

WARNING

Put on the protective gloves provided with the quick tyre repair kit.

❒ Make sure the handbrake is on. Unscrew the tyre valve cap, remove the flexible filler tube A-fig. 143 and fasten the nozzle B onto the tyre valve;

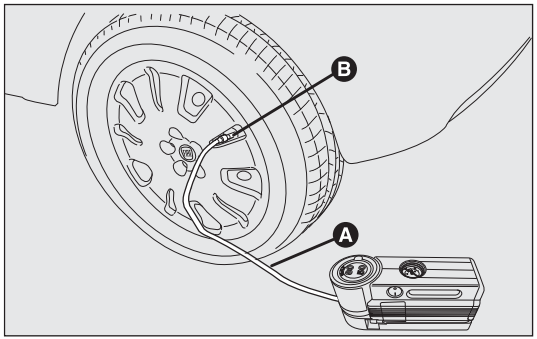

fig. 143 F0V0095m

- make sure that switch E-fig. 145 of the compressor is in position 0 (off), start the engine, insert plug D-fig. 144 into the socket and activate the compressor by turning switch E-fig. 145 to position I (on). Inflate the tyre to the pressure specified in the "Cold tyre pressures" paragraph in the "Technical specifications" section. For a more accurate reading, check pressure gauge F-fig. 145 with the compressor off;
- if a pressure value of a least 1.5 bar is not reached within five minutes, disconnect the compressor from the valve and socket, move the vehicle forwards by about 10 metres to distribute the sealant fluid within the tyre and repeat the inflation procedure;
- if in this case a pressure of at least 1.8 bar is not reached within five minutes of switching on the compressor, do not continue driving because the tyre is too damaged and the hold cannot be guaranteed. Contact a Fiat Dealership
- if you do reach the tyre pressure specified in the "Cold tyre pressures" paragraph of the "Technical specifications" section, continue your journey immediately;

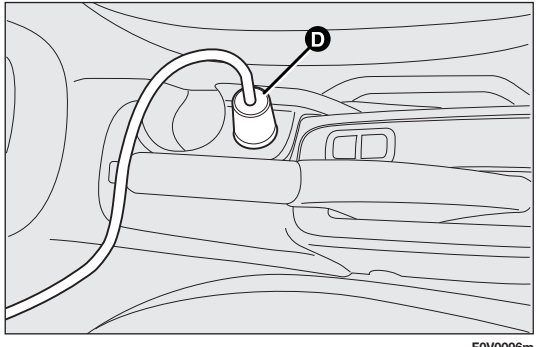

F0V0096m

fig. 144

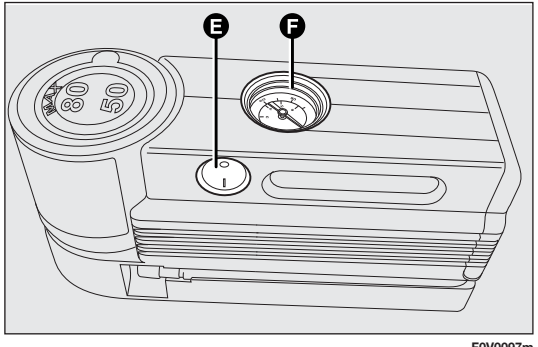

F0V0097m

fig. 145

WARNING

Apply the adhesive label where it can be easily seen by the driver as a reminder that the tyre has been treated with the quick repair kit. Drive carefully, particularly on bends. Do not exceed 80 km/h. Do not accelerate or brake suddenly.

❒ after driving for about 10 minutes, stop and check the tyre pressure again; remember to put the handbrake on;

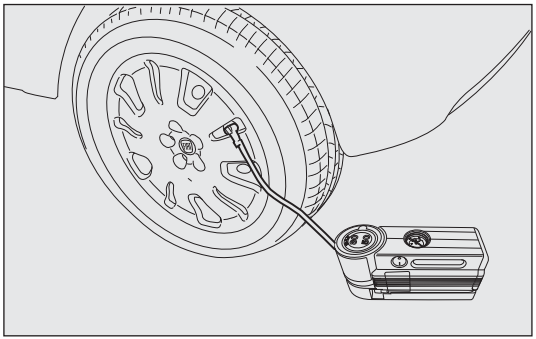

F0V0098m

fig. 146

WARNING

If the pressure has fallen below 1.8 bar, do not drive any further: the automatic Fix&Go quick tyre repair kit cannot guarantee proper hold because the tyre is too damaged. Contact a Fiat Dealership.

❒ If you get a pressure reading of at least 1.8 bar, restore the proper pressure (with engine running and handbrake on) and continue your journey.

❒ drive with the utmost care to the nearest Fiat Dealership.

WARNING

Remember to inform the workshop that the tyre has been treated with a quick repair kit. Give the instruction booklet to the personnel charged with handling the treated tyre.

FOR CHECKING AND RESTORING PRESSURE ONLY

The compressor may also be used for restoring pressure only. Release the quick coupling and connect directly to the tyre valve fig. 147; in this way, the canister will not be connected to the compressor and no sealing fluid will be injected.

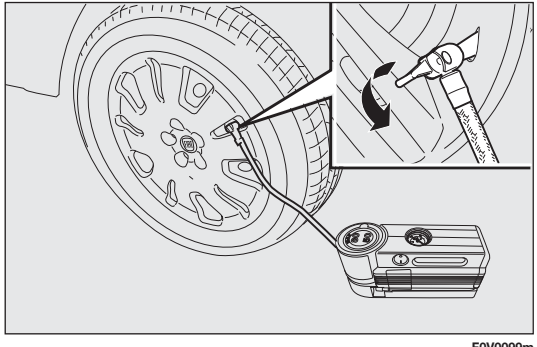

F0V0099m

fig. 147

CYLINDER REPLACEMENT PROCEDURE

To replace the cylinder, proceed as follows:

- ❒ disconnect B-fig. 148;
- ❒ turn the canister anticlockwise to lift it out;
- ❒ insert the new canister and turn it clockwise;
- ❒ connect B to the canister and fit the filler tube A into its allocated space.

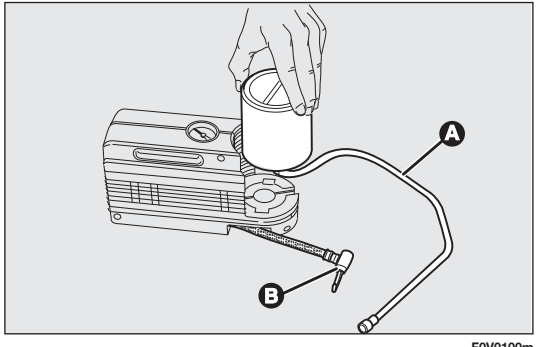

F0V0100m

fig. 148

CHANGING A BULB

GENERAL INSTRUCTIONS

❒ Before changing a bulb, check the contacts for rusting;

❒ burnt-out bulbs must be replaced by others of the same type and wattage;

❒ always check the direction of the beam after changing a headlight bulb;

❒ when a light is not working, check that the corresponding fuse is intact before changing the bulb. For the location of fuses, refer to the "Changing a fuse" paragraph in this section.

WARNING

Changes or repairs to the electrical system carried out incorrectly and without due consideration for the technical specifications of the system can lead to malfunctioning and generate a fire hazard.

WARNING

Halogen lamps contain pressurised gas. If they break, glass fragments could fly everywhere.

Touch only the metal part of a halogen lamp. Touching the transparent part of the bulb with your fingers may reduce the intensity of the emitted light and even reduce the lifespan of the bulb. If you do touch it accidentally, rub the bulb with an alcohol-soaked cloth and leave to dry.

If possible, we recommend that you let a Fiat Dealership replace the bulbs. Proper operation and orientation of the external lights are essential for driving safety and complying with the law.

IMPORTANT The internal surface of the light may appear slightly misty: this does not indicate a fault, and is actually caused by low temperature and the degree of humidity in the air. Misting will rapidly disappear when the headlights are switched on. The presence of drops inside the headlights indicates infiltration of water. Go to a Fiat Dealership.

BULB TYPES fig. 149

Various types of bulbs are fitted to your vehicle.

A Glass bulbs: pushed into position. Pull to extract.

B Bayonet-type bulbs: to remove from its holder, press the bulb in and turn it anti-clockwise.

C Tubular bulbs: release them from their contacts to remove.

D Halogen bulbs: to remove the bulb, release the clip holding the bulb in place.

E Halogen bulbs: to remove the bulb, release the clip holding the bulb in place.

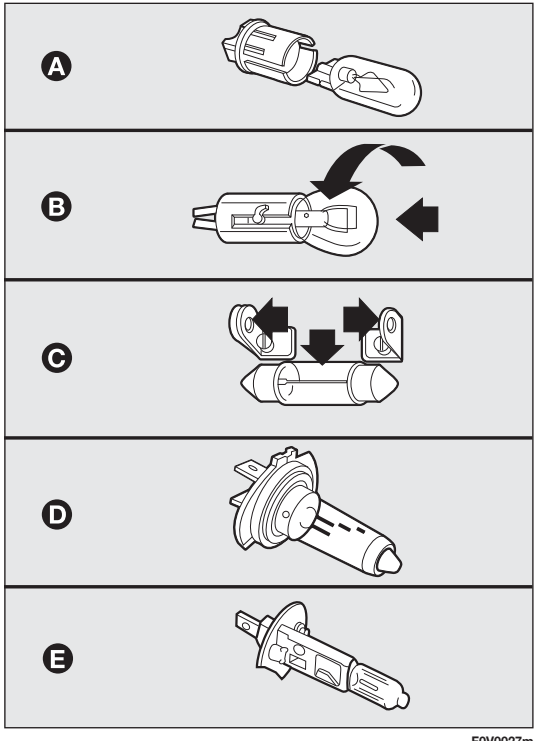

fig. 149

Bulbs	Type	Power	Fig. ref.
Main beams	H1	55W	**E**
Dipped beams	H7	55W	**D**
Front side lights	W5W	5W	**A**
Daytime running lights	W21W	21W	**A**
Front direction indicators	PY21W	21W	**B**
Side direction indicators	WY5W	5W	**A**
Rear direction indicators	PY21W	21W	**B**
Taillights/rear fog lights	P4/21W	4W/21W	**B**
Brake lights	P21W	21W	**B**
3rd brake light	W5W	5W	**A**
3rd brake light stop (for privacy glass)	Xenon 6W	6W	**A**
Reverse light	W16W	16W	**A**
Front fog lights (for versions/markets where provided)	H1	55W	**E**
Front ceiling light with movable lens	C10W	10W	**C**
Front ceiling light with spot lights (for versions/markets where provided)	C10W	10W	**C**
Rear courtesy light (Doblò/Doblò Combi)	C10W	10W	**C**
Rear courtesy light (Cargo)	C15W	15W	**C**
Additional rear courtesy light Cargo long wheelbase	C10W	10W	**C**
Removable courtesy light (for Cargo, where provided)	C10W	10W	**C**
Boot courtesy light (Doblò/Doblò Combi)	W5W	5W	**A**

CHANGING AN EXTERIOR BULB

For the type of bulb and relevant power rating, see "Changing a bulb".

FRONT LIGHT CLUSTERS fig. 150

The front light clusters contain sidelight, dipped beam, main beam and direction indicator bulbs.

The bulbs are arranged inside the light cluster as follows:

A Direction indicators.

B Side lights and dipped beam headlights;

C Daytime running lights and main beams.

To access the bulbs, remove the snap-fitted covers.

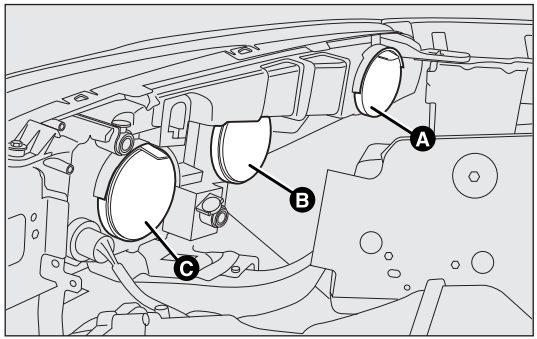

F0V0028m

fig. 150

SIDE LIGHTS

To change the bulb, proceed as follows:

❒ remove the protective cover B-fig. 150;

❒ turn the bulb holder A-fig. 151 anticlockwise and pull it out;

❒ remove the bulb B and replace it;

❒ refit the new bulb, put the bulb holder A-fig. 151 back into place and then refit the protective cover B-fig. 150 properly.

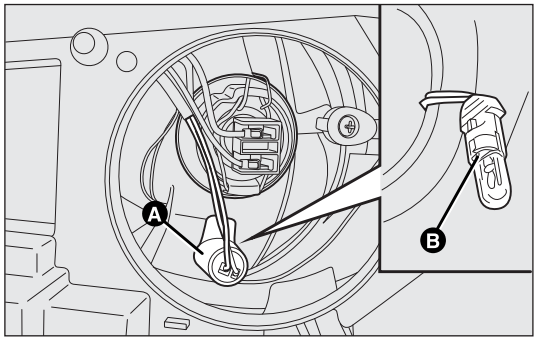

F0V0029m

fig. 151

DIPPED BEAM HEADLIGHTS

To change the bulb, proceed as follows:

❒ remove the protective cover B-fig. 150;

❒ disconnect the electric connector;

❒ release the bulb holding clips A-fig. 152;

❒ remove the bulb B-fig. 152 and replace it;

❒ fit the new bulb, ensuring that the outline of the metal part lines up with the grooves on the headlight parabola. Then reconnect the electrical connector and reattach the bulb holding clips A;

❒ refit the protective cover B-fig. 150 correctly.

DIRECTION INDICATORS

Front

To change the bulb, proceed as follows:

❒ remove the protective cover A-fig. 150;

❒ turn the bulb holder C-fig. 153 anticlockwise and pull it out;

❒ remove the bulb B-fig. 153 by pushing it in slightly and turning it anticlockwise;

❒ replace the bulb and refit the bulb holder C by turning it clockwise and locking it properly into place;

❒ reattach the protective cover A-fig. 150;

Side

IMPORTANT Go to a Fiat Dealership to have bulbs for the side direction indicators replaced, because they are located inside the wing mirror.

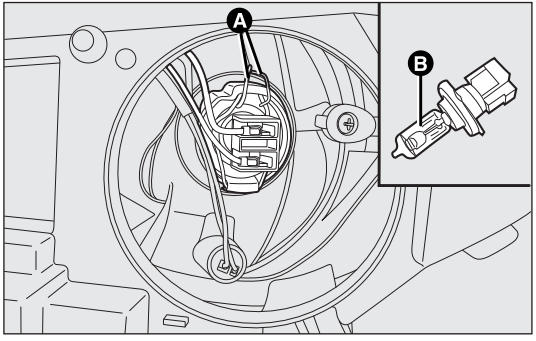

F0V0030m

fig. 152

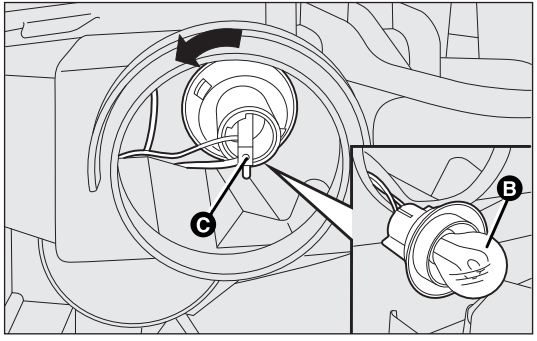

F0V0031m

fig. 153

MAIN BEAM HEADLIGHTS

To change the bulb, proceed as follows:

❒ remove the protective cover C-fig. 150;

❒ disconnect the electric connector;

❒ release the bulb holding clips D-fig. 154;

❒ remove the bulb and replace it;

❒ fit the new bulb, ensuring that the outline of the metal part lines up with the grooves on the headlight parabola. Then reconnect the electrical connector and reattach the bulb holding clips D;

❒ refit the protective cover C-fig. 150 correctly.

DAYTIME RUNNING LIGHTS

To change the bulb, proceed as follows:

❒ remove the protective cover C-fig. 150;

❒ turn the bulb holder E-fig. 155 anticlockwise and pull it out;

❒ remove the snap-fitted bulb;

❒ replace the bulb and refit the bulb holder E by turning it clockwise and locking it properly into place;

❒ reattach the protective cover C-fig. 150;

FRONT FOG LIGHTS

(for versions/markets where provided)

IMPORTANT Go to a Fiat Dealership to have the front fog light bulbs replaced.

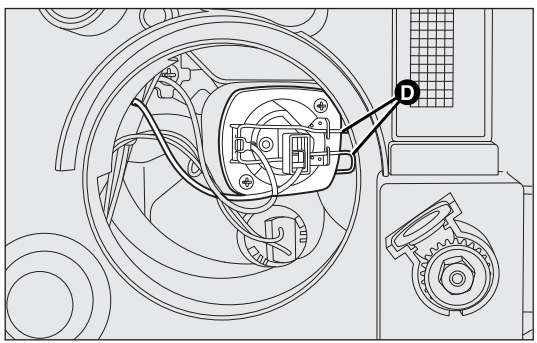

fig. 154

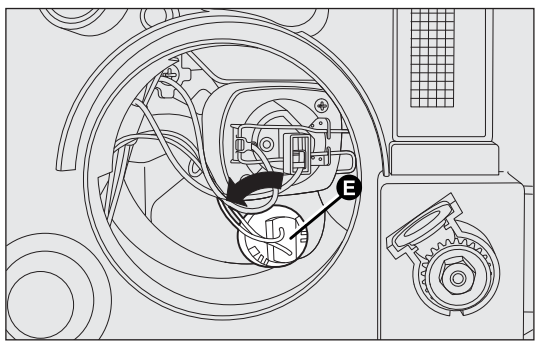

fig. 155

REAR LIGHT CLUSTERS

The rear light clusters contain taillight, brake light, direction indicator and reverse/rear fog light bulbs. To access the light clusters, proceed as follows:

❒ open the rear doors;

❒ undo the fastening screws A-fig 156;

❒ disconnect the electrical connector and then remove the light cluster.

The bulbs are arranged inside the light cluster fig. 157 as follows:

A Brake lights

B Direction indicators

C Reverse lights

D Taillights

F Taillights/rear fog light;

To change the reverse light bulbs, turn bulb holder C-fig. 157 anticlockwise, extract the snap-fitted bulb and replace it.

To access bulbs A – B – D – F, loosen the four fastening screws E-fig. 157 and extract the bulb holder. To change the bulb, push it in gently and turn it anticlockwise ("bayonet" fixture), then remove and replace it.

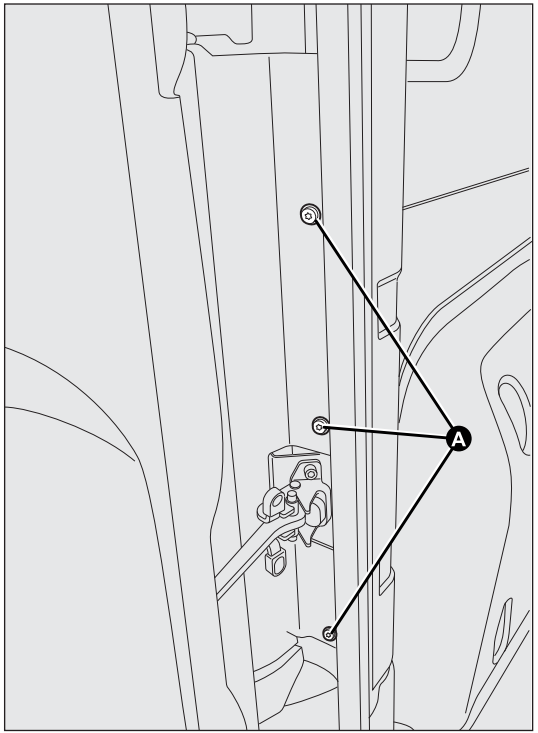

F0V0034m

fig. 156

THIRD BRAKE LIGHT fig. 158-159a-159b

To change the bulb, proceed as follows:

- ❒ for versions with tailgate, loosen the two fastening screws A-fig. 158 and extract the cluster;
- ❒ for versions with swing doors, remove rubber plugs B-fig. 159a, manoeuvre retaining tabs C and extract the cluster;
- ❒ for versions with high roof and swing doors, remove the pressure-fit plastic guard A-fig. 159b and rubber cap B-fig.159b; using a screwdriver, release the retaining tags as shown in the figure and remove the unit;
- ❒ manoeuvre the appropriate tabs and remove the bulb holder;
- ❒ remove the snap-fitted bulb and replace it.

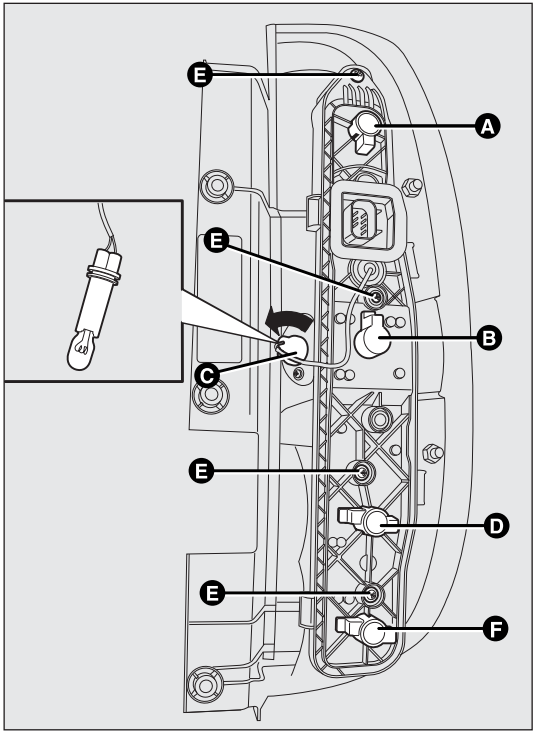

F0V0035m

fig. 157

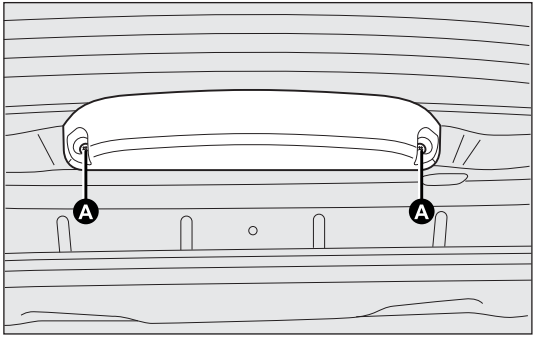

F0V0163m

fig. 158

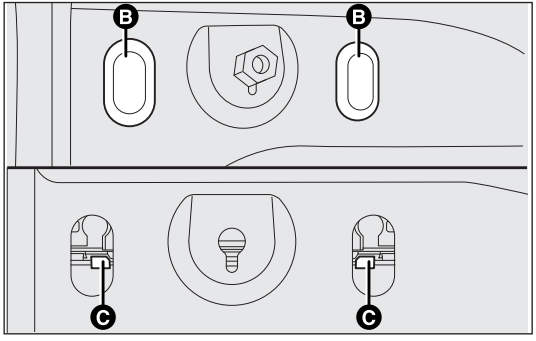

F0V0164m

fig. 159a

NUMBERPLATE LIGHTS (for hatchback versions)

Proceed as follows to replace the bulbs A-fig. 160:

- ❒ manoeuvre the holding tabs at the points indicated by the arrows, and remove the bulb holder;
- ❒ turn the bulb holder B-fig. 161 anticlockwise, then remove the bulb C.

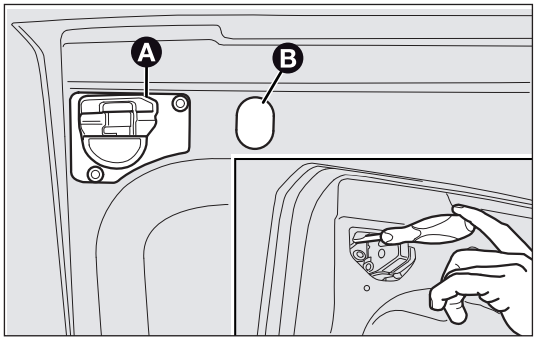

F0V0231m

fig. 159b

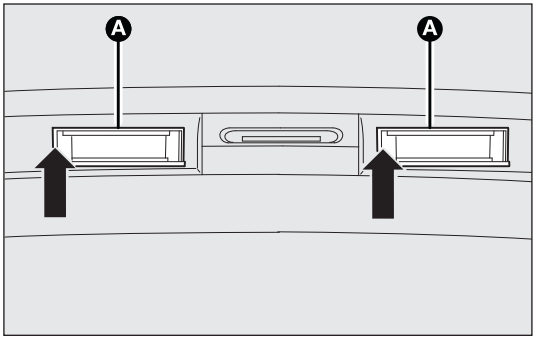

F0V0179m

fig. 160

NUMBERPLATE LIGHTS (for versions with swing doors)

Proceed as follows to replace the bulbs A-fig. 162:

- ❒ manoeuvre the holding tabs at the points indicated in the diagram, and remove the lens by lifting to the left;
- ❒ remove the bulbs by releasing them from the side contacts; insert the new bulbs and make sure they are correctly clamped between these contacts;

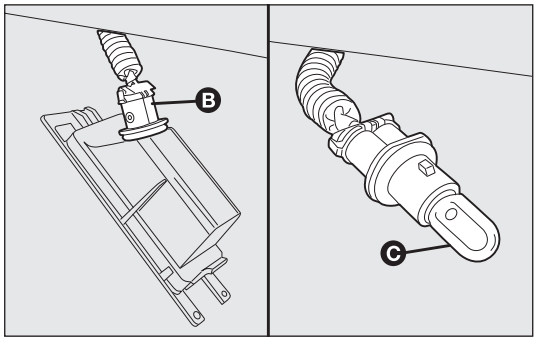

F0V0037m

fig. 161

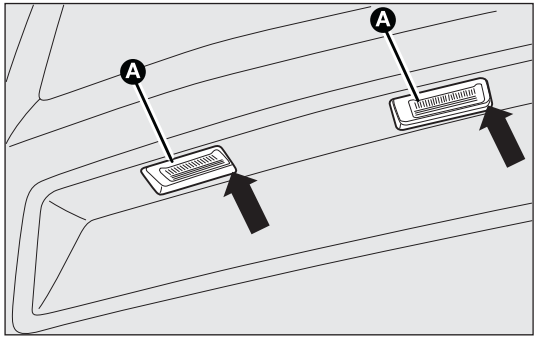

F0V0036m

fig. 162

CHANGING AN INTERIOR BULB

For the type of bulb and power rating, see "Changing a bulb".

FRONT CEILING LIGHT

Ceiling light with movable lens

Proceed as follows to replace the bulbs:

❒ remove the ceiling light A-fig. 163 by manoeuvring the points shown by the arrows;

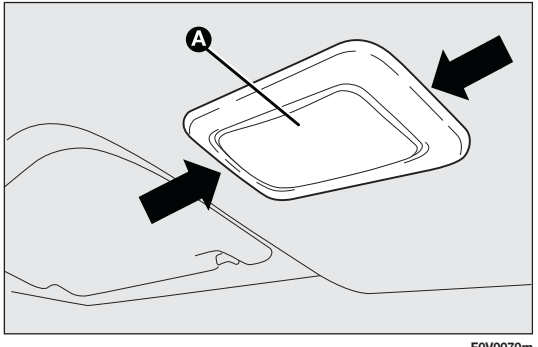

fig. 163

❒ open the cover B-fig. 164 as shown;

❒ remove bulb C-fig. 165 by releasing it from the side contacts, then insert the new bulb and make sure it is correctly clamped between these contacts;

❒ close the cover and secure the ceiling light into its housing, making sure it locks properly into place.

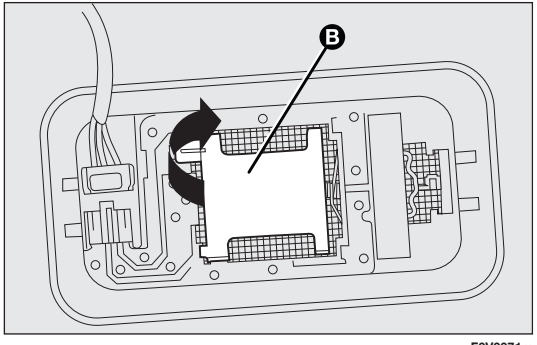

fig. 164

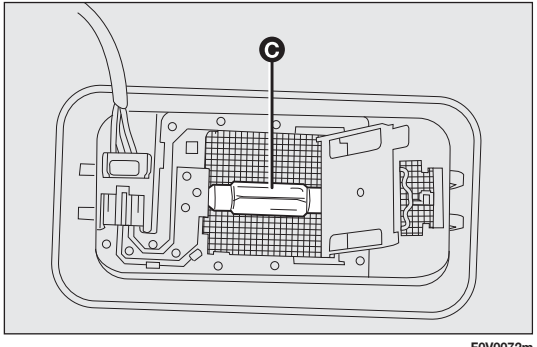

fig. 165

Ceiling light with spot lights (where provided)

Proceed as follows to replace the bulbs:

❒ manipulate the points shown by the arrows and remove ceiling light A-fig. 166;

❒ open the protective flap B-fig. 167;

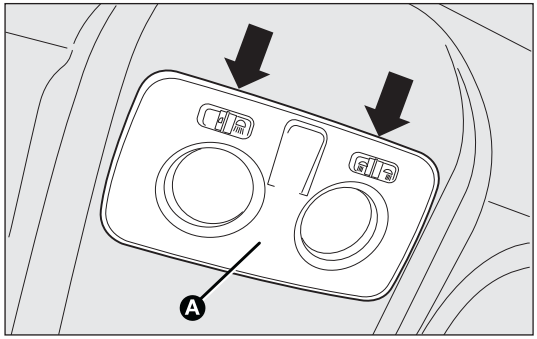

F0V0073m

fig. 166

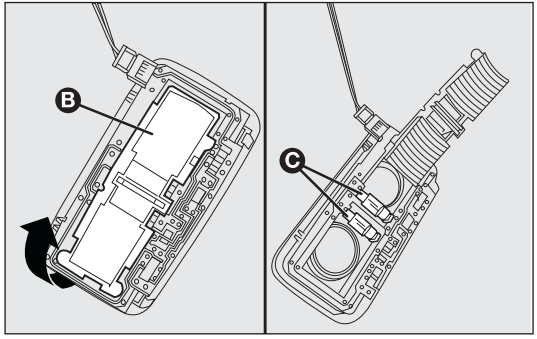

F0V0074m

fig. 167

❒ replace bulbs C by releasing them from the side contacts and making sure that the new bulbs are correctly clamped between these contacts;

❒ close the flap B-fig. 167 and refit the ceiling light A-fig. 166 in its housing, making sure it locks into place correctly.

REAR CEILING LIGHT

To change the bulb, proceed as follows:

❒ remove the ceiling light A-fig. 168 by manoeuvring the points shown by the arrows;

❒ open the cover B-fig. 169 as shown;

❒ remove bulb C-fig. 170 by releasing it from the side contacts, then insert the new bulb and make sure it is correctly clamped between these contacts;

❒ close the cover B-fig. 169 and secure the ceiling light into its housing, making sure it locks properly into place.

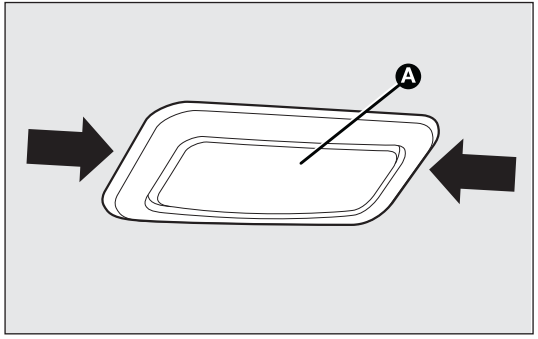

F0V0075m

fig. 168

Removable ceiling light

To change the bulb, proceed as follows:

- ❒ push button A-fig. 171 and extract the removable light B;
- ❒ do so by manoeuvring the points shown by the arrows;
- ❒ replace bulb C-fig. 172 by releasing it from the side contacts and making sure that the new bulb is correctly clamped between these contacts;

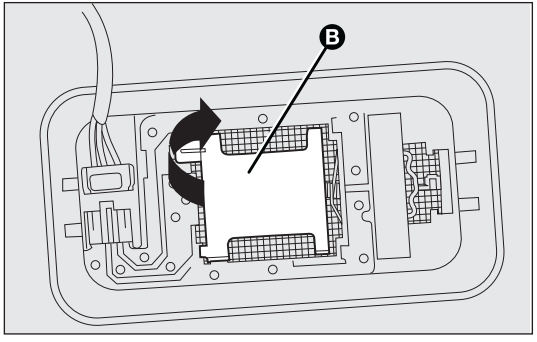

F0V0071m

fig. 169

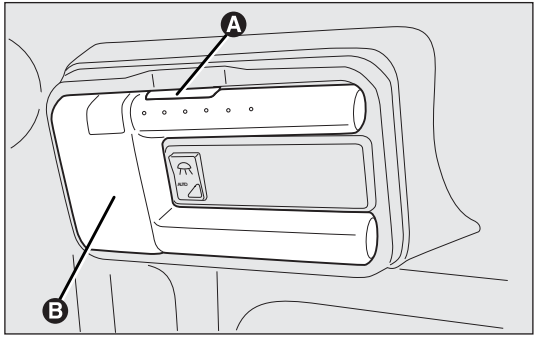

F0V0176m

fig. 171

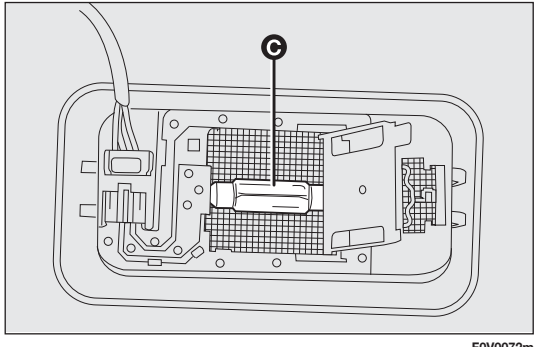

F0V0072m

fig. 170

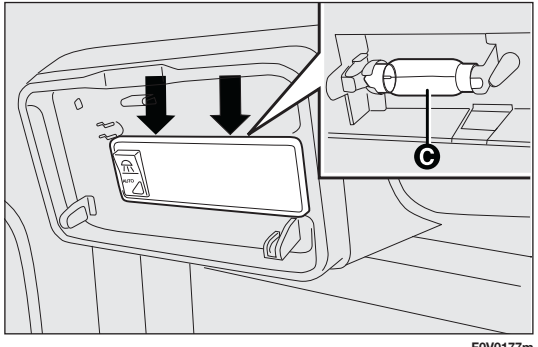

F0V0177m

fig. 172

CHANGING A FUSE

GENERAL INFORMATION

The fuse is a protective device for the electric system: it operates if there is a fault or improper intervention in the system.

Check the state of the corresponding fuse when a device does not work: the filament A-fig. 173 should be intact.

If it is not, replace the blown fuse with a new one of the same amperage (same colour).

B intact fuse.

Cfuse with damaged filament.

To change a fuse, use the tweezer D located in the tool box or the Fix&Go container (for versions/markets where provided).

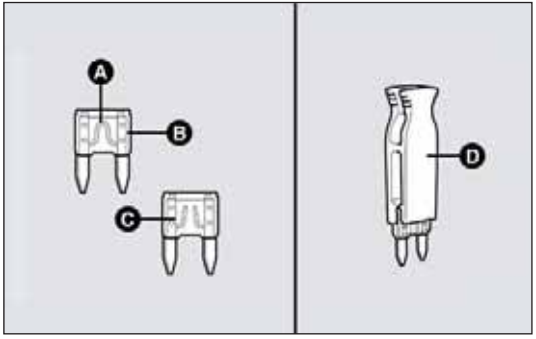

fig. 173

WARNING

If the same fuse blows again, contact a Fiat Dealership.

Never replace a damaged fuse with metal wires or other recycled material.

WARNING

Do not replace one fuse with another of greater amperage; FIRE HAZARD.

If a general protection fuse (MEGA-FUSE, MIDI-FUSE) is activated, contact a Fiat Dealership.

Remove the key from the ignition and switch off or disable all electrical devices before replacing a fuse.

WARNING

If a general protection fuse for safety systems (air bag system, braking system), power unit systems (engine system, transmission system) or steering system is triggered, contact a Fiat Dealership.

To identify the protective fuse, see the tables on the following pages.

ENGINE COMPARTMENT FUSE BOX

The box is located on the right-hand side of the engine, next to the battery. To remove the protective cover A and access the fuse box, undo the two fastening screws B.

If you need to clean the engine compartment, take care not to directly hit the fuse box with the water jet.

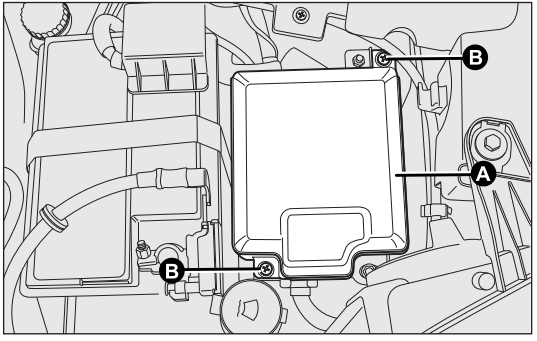

fig. 174

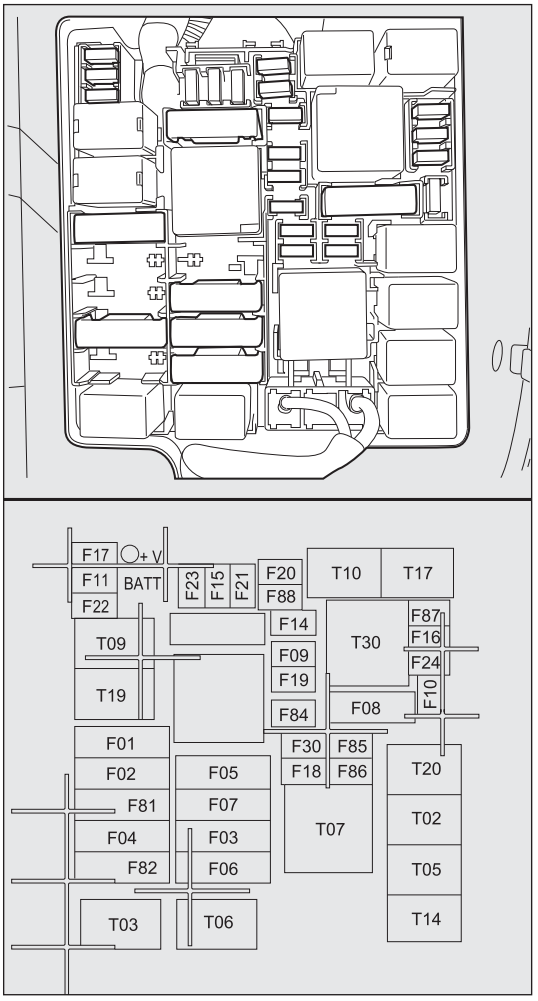

fig. 175

PROTECTED DEVICE FUSE	FUSE	AMPS	FIGURE
BCM – Body Computer Control Unit	F01	60	175
Rear window winder driver's side manual gearbox (Doblò/Doblò Combi versions)	F02	20	175
Ignition switch	F03	20	175
BSM Braking system control unit (electropump)	F04	40	175
Additional heater PTC2 (diesel engines)	F05	50	175
Radiator fan (low speed)	F06	30	175
Radiator fan (high speed, 187/300/350W)	F07	40	175
Radiator fan (high speed, 500W)	F07	60	175
Passenger compartment fan	F08	40	175
Remote control switch for opening swing door (Cargo version)	F09	10	175
Single tone horn	F10	10	175
Engine control system secondary loads	F11	10	175
Main beams	F14	15	175
Additional heater PTC1 (diesel engines)	F15	30	175
ECM Engine management control unit, ignition management relay 1 with Start&Stop system	F16	7,5	175

PROTECTED DEVICE FUSE	FUSE	AMPS	FIGURE
ECM Engine control unit (power supply) (1.3 Multijet Euro 4, 1.4 BZ, 1.6 Multijet – 2.0 JTD)	F17	10	175
ECM Engine control unit, engine control system management main relay	F18	7,5	175
Climate control compressor	F19	7,5	175
Heated rear window	F20	30	175
Fuel pump on tank	F21	15	175
Engine management system primary loads (1.3 Multijet Euro 4, 1.4)	F22	15	175
Engine management system primary loads (1.3 Multijet Euro / Euro 5, 1.6 Multijet – 2.0 JTD)	F22	20	175
BSM Braking system ECU (control unit and solenoid unit)	F23	20	175
BSM Braking system control unit (supply and key), steering angle sensor	F24	5	175
Fog lights	F30	15	175
Glow plug pre-heating control unit (1.3 Multijet Euro 4, 1.3 Multijet Euro 5, 1.6 Multijet – 2.0 JTD Euro 4 – Euro 5)	F81	60	175
Rear window winder passenger's side (Doblò/Doblò Combi versions with manual gearbox)	F82	20	175
Headlight washer pump	F83	20	175

PROTECTED DEVICE FUSE	FUSE	AMPS	FIGURE
Passenger compartment socket, rear socket	F85	30	175
Cigarette lighter, heated seats	F86	30	175
IBS Battery charge status sensor for Start&Stop system	F87	5	175
Wing mirror defrosters	F88	7,5	175

PASSENGER COMPARTMENT FUSE BOX

To access the fuses, remove snap-fitted protective cover A-fig. 176.

The fuses are positioned in the two areas illustrated in fig. 177.

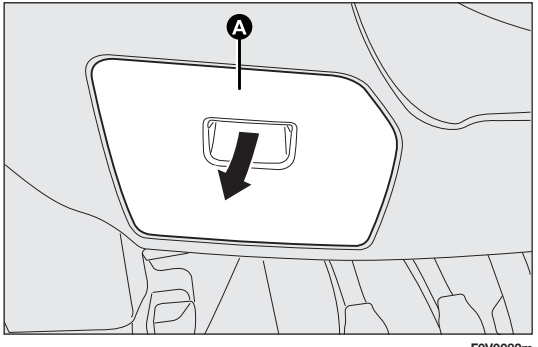

fig. 176

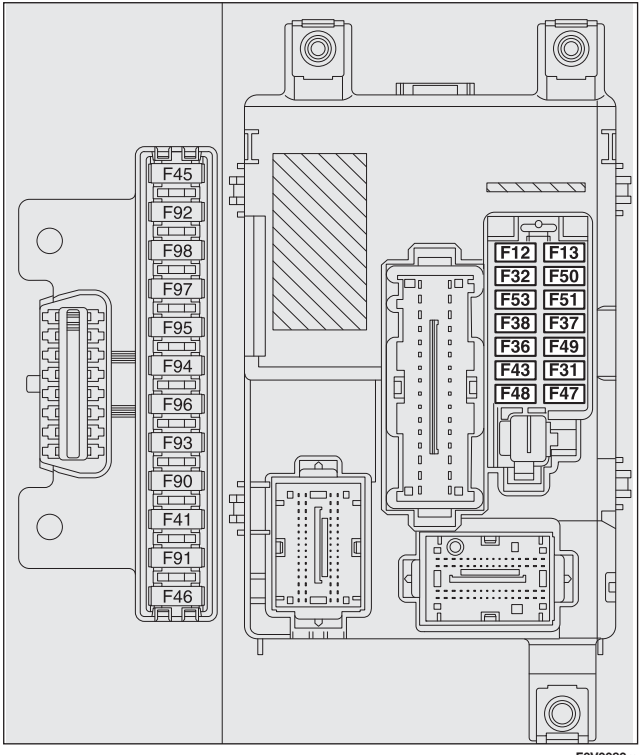

fig. 177

PROTECTED DEVICE FUSE	FUSE	AMPS	FIGURE
Right low beam	F12	7,5	177
Front courtesy light, rear courtesy light, lights on sun visors, door clearance lights, boot light	F32	7,5	177
Instrument panel	F53	5	177
Door lock/unlock motors, dead lock actuator motors, tailgate lock motor	F38	20	177
Power + battery for EOBD diagnostic socket, automatic climate control unit, alarm siren, sound system, convergence control unit Blue&Me™, tyre pressure detector control unit	F36	10	177
Windscreen/rear window washer pump	F43	15	177
Window winder motor for front door passenger side	F48	20	177
Left low beam, headlight corrector	F13	7,5	177
Int. power for brake pedal switch, clutch pedal switch, interior heater, convergence control unit Blue&Me™, sound system set-up	F51	7,5	177
Int. power for instrument panel, brake pedal switch, third brake light	F37	5	177
Int. power for control panel lights, parking control unit, tyre pressure detector control unit, electric door mirror motor, rain sensor, electric top control unit, My-port infotainment socket	F49	5	177
Int. power for engine fusebox relay coils and body computer relay coils	F31	5	177
Window winder motor for front door driver's side	F47	20	177
Rear socket	F94	15	177
Cigarette lighter/Passenger compartment socket	F95	15	177
Cigarette lighter/Passenger compartment socket	F96	15	177
Heated driver seat	F97	10	177
Heated passenger seat	F98	10	177

RECHARGING THE BATTERY

IMPORTANT The battery recharging procedure is provided for information purposes only. You are recommended to go to a Fiat Dealership to have this operation performed.

We recommend recharging the battery slowly for approximately 24 hours at low amperage. A prolonged recharge might damage the battery.

Charge the battery as follows:

WITHOUT START&STOP SYSTEM

- ❒ disconnect battery negative terminal;
- ❒ connect the charger cables to the battery terminals, observing the polarity;
- ❒ turn on the charger;
- ❒ when you have finished, turn the charger off before disconnecting it from the battery;
- ❒ reconnect negative battery terminal.

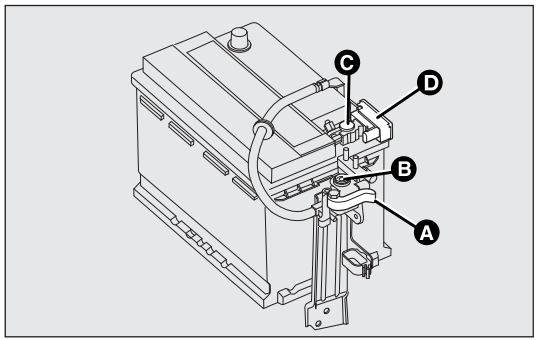

F0V0209m

fig. 177b

IF THE START&STOP SYSTEM IS INSTALLED

Versions with dummy pole fig. 177b

- ❒ disconnect the quick release negative terminal A from the dummy negative terminal B; this is because a battery status monitoring sensor D is fitted on the negative battery terminal C and should never be disconnected except for when the battery is actually replaced;
- ❒ connect the positive cable of the charger to the positive pole of the battery and the negative cable to the dummy negative terminal B;
- ❒ turn on the charger;
- ❒ when you have recharged, turn the charger off before disconnecting it from the battery;
- ❒ after disconnecting the charger, reconnect the quick release negative A to the dummy terminal B.

Versions without dummy pole fig. 177c

- ❒ Disconnect the connector A (pressing the button B) from the sensor C monitoring the battery conditions, on the negative pole D of the battery;
- ❒ connect the battery charger positive cable to the battery positive pole E and the negative cable to the terminal of sensor F, according to fig. 177c;
- ❒ turn the battery charger on;
- ❒ at the end of the charging process, switch the battery charger off;
- ❒ after having disconnected the battery charger, re-connect the connector A to the sensor C, according to fig. 177c.

WARNING

Battery fluid is poisonous and corrosive: avoid contact with your skin and eyes. The battery recharging operation must be performed in a ventilated place, away from naked flames or possible sources of sparks to avoid the risk of explosion and fire.

WARNING

Don't try to recharge a frozen battery: defrost it first or it might explode. If the battery was frozen, have it inspected by specialised personnel before recharging to check that the internal elements are not damaged and that the casing is not cracked, which could cause poisonous, corrosive acid to leak.

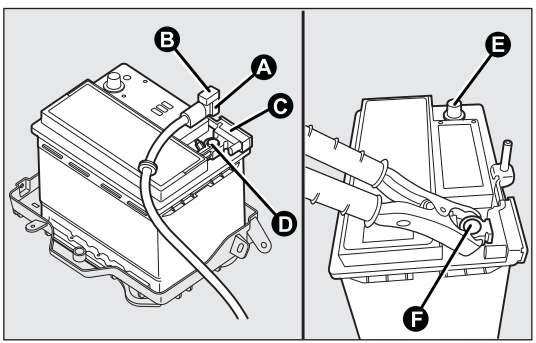

F0V0213m

fig. 177c

RAISING THE VEHICLE

If the vehicle needs to be lifted, go to a Fiat Dealership which is equipped with the arm hoist or workshop lift.

TOWING THE VEHICLE

The tow ring supplied with the vehicle is located in the tool box located either behind the left seat backrest (Cargo versions) or in the boot (Doblò / Doblò Combi versions).

FASTENING THE TOW RING fig. 178-179

Proceed as follows:

❒ release the cap A;

❒ remove the tow ring B from the tool box;

❒ screw the ring tightly onto the rear or front threaded pin.

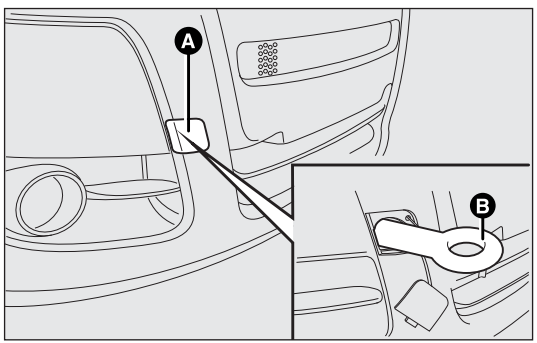

F0V0050m

fig. 178

WARNING

Before towing, turn the ignition key to MAR and then to STOP without extracting it. The steering column will automatically lock when the key is removed, making it impossible to turn the wheels.

WARNING

Before tightening the ring, clean the threaded housing thoroughly. Before towing the vehicle, make sure that the tow ring is fully tightened in its appropriate housing.

Never start the engine when the vehicle is being towed.

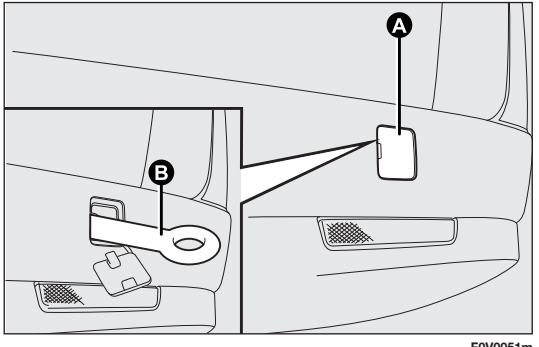

F0V0051m

fig. 179

WARNING

Remember that, while being towed, you will need to brake harder because there will be no assistance from the brake booster. Do not use bendy cables for towing and avoid jerking. During towing operations, make sure that the fastened joint does not damage adjoining components. When towing the vehicle, comply with the specific rules of the highway code regarding the towing device and road conduct. Do not start the engine while being towed.

The front and rear tow hooks should be used only for emergencies on the road. You are allowed to tow the car for short distances using an appropriate device in accordance with the highway code (a rigid bar), to move the vehicle on the road in readiness for towing or transporting via a breakdown vehicle. Tow hooks MUST NOT be used to tow vehicles off the road or where there are obstacles and/or for towing operations using cables or other non-rigid devices. Respecting the above conditions, towing must take place with two vehicles (one towing, the other towed) aligned as much as possible along the same centre line.

SCHEDULED SERVICING

Correct servicing is essential for ensuring long vehicle life under the best conditions.

This is why Fiat has planned a series of checks and service operations every 30,000/35,000 km (according to versions).

It is, however, important to remember that scheduled servicing does not completely cover all the vehicle's requirements: even in the initial period before 30,000/35,000 km, and then subsequently between one service and another, ordinary care is always required such as routine checks involving topping up fluid levels, checking tyre pressures etc...

IMPORTANT Scheduled Services are prescribed by the manufacturer. Failure to stick to the schedule may invalidate the warranty.

Scheduled Servicing is performed by all Fiat Dealerships at pre-arranged times.

If, during each part of the service, the need arises for additional replacements or repairs, these may be carried out only with the explicit agreement of the Customer.

IMPORTANT You are advised to contact a Fiat Dealership immediately in the event of any minor operating faults, without waiting for the next service.

If your vehicle is used frequently for towing trailers, the interval between scheduled services must be reduced.

SCHEDULED SERVICING PLAN

PETROL VERSIONS

Thousands of kilometres	30	60	90	120	150	180
Check tyre conditions/wear and adjust pressure if required	●	●	●	●	●	●
Check operation of lighting system (headlamps, direction indicators, hazard warning lights, luggage compartment, passenger compartment, glove compartment, instrument panel warning lights, etc.)	●	●	●	●	●	●
Check operation of windscreen washer/wipers, adjust nozzles	●	●	●	●	●	●
Check position/wear of the windscreen wiper blades.	●	●	●	●	●	●
Check condition and wear of front disc brake pads and brake pad wear indicator	●	●	●	●	●	●
Check condition and wear of rear drum brake linings		●		●		●
Visually inspect the conditions of: bodywork, underbody protection, pipes and tubes (exhaust – fuel – brakes), rubber parts (boots, sleeves, bushes, etc.)	●	●	●	●	●	●
Check cleanliness of bonnet and boot locks, as well as cleanliness and lubrication of linkages	●	●	●	●	●	●
Visually inspect the condition of accessory drive belt(s).		●				●
Check tension of accessory drive belt(s) (versions without automatic tensioner)	●				●	
Check the handbrake lever stroke and adjust it, if necessary.	●	●	●	●	●	●
Check exhaust gas emissions	●	●	●	●	●	●

Thousands of kilometres	30	60	90	120	150	180
Check condition of toothed timing belt		●				●
Replace spark plugs	●	●	●	●	●	●
Replace accessory drive belt(s)				●		
Replace toothed timing belt (*)				●		
Replace air filter cartridge		●		●		●
Check and, if necessary, top up fluid levels (brakes/hydraulic clutch, windscreen washer, battery, engine coolant, etc.)	●	●	●	●	●	●
Check engine management system operation (through diagnostic socket)	●	●	●	●	●	●
Check cleanliness of sliding side door lower guides (or every 6 months)	●	●	●	●	●	●
Change engine oil and replace oil filter (or every 24 months) (**)	●	●	●	●	●	●
Change brake fluid (or every 24 months)		●		●		●
Replace pollen filter (or every 24 months)	●	●	●	●	●	●

(*) Regardless of distance covered, the timing belt must be replaced every four years in the case of particularly demanding use (cold climate, city traffic, long idling) or at least every five years in all other cases.

(**) If the vehicle is mainly driven in towns or clocks less than 10,000 km a year, the engine oil and filter should be changed every 12 months.

DIESEL VERSIONS WITHOUT DPF (1.3 Multijet – 1.6 Multijet)

Thousands of kilometres	30	60	90	120	150	180
Check tyre conditions/wear and adjust pressure if required	●	●	●	●	●	●
Check operation of lighting system (headlamps, direction indicators, hazard warning lights, luggage compartment, passenger compartment, glove compartment, instrument panel warning lights, etc.)	●	●	●	●	●	●
Check operation of windscreen wiper/washer system and adjust nozzles if necessary.	●	●	●	●	●	●
Check position/wear of the windscreen wiper blades.	●	●	●	●	●	●
Check condition and wear of front disc brake pads and brake pad wear indicator	●	●	●	●	●	●
Check condition and wear of rear drum brake linings		●		●		●
Visually inspect the conditions of: bodywork, underbody protection, pipes and tubes (exhaust – fuel – brakes), rubber parts (boots, sleeves, bushes, etc.)	●	●	●	●	●	●
Check cleanliness of bonnet and boot locks, as well as cleanliness and lubrication of linkages	●	●	●	●	●	●
Check and, if necessary, top up fluid levels (brakes/hydraulic clutch, windscreen washer, battery, engine coolant, etc.)	●	●	●	●	●	●
Check tension of accessory drive belt (versions without automatic tensioner)	●				●	
Check the handbrake lever stroke and adjust it, if necessary.	●	●	●	●	●	●
Visually inspect the condition of accessory drive belt(s).		●				●
Check exhaust gas emissions/smokiness.	●	●	●	●	●	●

Thousands of kilometres	30	60	90	120	150	180
Check engine management system operation (via diagnostic socket)	●	●	●	●	●	●
Check cleanliness of sliding side door lower guides (or every 6 months)	●	●	●	●	●	●
Replace accessory drive belt(s)				●		
Replace toothed timing belt (*) (1.6 Multijet version)					●	
Replace fuel filter		●		●		●
Replace air filter cartridge		●		●		●
Change engine oil and replace oil filter (or every 24 months)	●	●	●	●	●	●
Change brake fluid (or every 24 months)		●		●		●
Replace pollen filter (or every 24 months)	●	●	●	●	●	●

(*) Regardless of distance covered, the timing belt must be replaced every four years in the case of particularly demanding use (cold climate, city traffic, long idling) or at least every five years in all other cases.

DIESEL VERSIONS WITH DPF (1.3 Multijet – 1.6 Multijet – 2.0 Multijet)

Thousands of kilometres	35	70	105	140	175
Check tyre conditions/wear and adjust pressure if required	●	●	●	●	●
Check lighting system operation (headlights, direction indicators, hazard lights, boot, passenger compartment, glove box, instrument panel warning lights, etc.)	●	●	●	●	●
Check operation of windscreen wiper/washer system and adjust nozzles if necessary	●	●	●	●	●
Check position/wear of the windscreen wiper blades.	●	●	●	●	●
Check condition and wear of front disc brake pads and brake pad wear indicator	●	●	●	●	●
Check condition and wear of rear drum brake linings		●		●	
Visually inspect the conditions of: bodywork, underbody protection, pipes and tubes (exhaust – fuel – brakes), rubber parts (boots, sleeves, bushes, etc.)	●	●	●	●	●
Check cleanliness of bonnet and boot locks, as well as cleanliness and lubrication of linkages	●	●	●	●	●
Check and, if necessary, top up fluid levels (brakes/hydraulic clutch, windscreen washer, battery, engine coolant, etc.)	●	●	●	●	●
Check tension of accessory drive belt (versions without automatic tensioner)	●			●	
Check the handbrake lever stroke and adjust it, if necessary.	●	●	●	●	●
Visually inspect the condition of accessory drive belt(s).		●			●
Check exhaust gas emissions/smokiness.	●	●	●	●	●

Thousands of kilometres	35	70	105	140	175
Check engine management system operation (via diagnostic socket)	●	●	●	●	●
Check cleanliness of sliding side door lower guides (or every six months)	●	●	●	●	●
Replace accessory drive belt(s)			●		
Replace toothed timing belt (*) (1.6 Multijet - 2.0 Multijet)				●	
Replace fuel filter		●		●	
Replace air filter cartridge	●	●	●	●	●
Change engine oil and replace oil filter (versions with DPF) (**) ⚠					
Change brake fluid (or every 24 months)		●		●	
Replace pollen filter (or every 24 months)	●	●	●	●	●

(*) Regardless of the distance covered, the timing belt must be changed every four years for particularly demanding use (cold climates, city driving, long periods of idling) or at least every five years in all other cases.

(**) The engine oil and filter should be replaced according to their effective state, displayed by a message or warning light on the instrument panel, or at least every 24 months.

⚠ If the vehicle is driven mainly in towns, change engine oil and filter every 12 months.

REGULAR CHECKS

Every 1,000 km or before long journeys, check and, if necessary, top up:

- ❒ engine coolant fluid level;
- ❒ brake fluid level;
- ❒ windscreen washer level;
- ❒ tyre pressure and conditions.
- ❒ operation of lighting system (headlights, direction indicators, hazard lights, etc.);
- ❒ operation of windscreen washer/wipers system and positioning/wear of windscreen/rear window wiper blades (for versions/markets where provided);

Check and top up, if required, the engine oil level every 3,000 km.

You are recommended to use **PETRONAS LUBRICANTS** products, which have been designed and produced specifically for Fiat vehicles (see "Capacities" table in the "Technical specifications" section).

HEAVY USAGE OF THE VEHICLE

If the vehicle is primarily used in one of the following particularly onerous conditions:

- ❒ towing trailers;
- ❒ dusty roads;
- ❒ short, repeated journeys (less than 7-8 km) at sub-zero temperatures;
- ❒ frequently idling engine or long-distance, low-speed driving (e.g. door-to-door deliveries) or lengthy inactivity;
- ❒ driving in towns and cities;

you should perform the following inspections more frequently than shown on the Scheduled Servicing Plan:

- ❒ check front disc brake pad conditions and wear;
- ❒ check cleanliness of bonnet and boot locks, and cleanliness and lubrication of linkages;
- ❒ visually inspect the conditions of: engine, gearbox, transmission, pipes and tubes (exhaust – fuel – brakes), rubber parts (boots, sleeves, bushes, etc.);
- ❒ check battery charge and fluid level (electrolite) (check to be carried out only by specialists or at a Fiat Dealership – see the "Battery" paragraph in this section);
- ❒ visually inspect the condition of the accessory drive belts;
- ❒ check pollen filter and replace, if required;
- ❒ check and, if necessary, replace air filter.

CHECKING LEVELS

A. Engine oil filler
B. Engine oil dipstick
C. Engine coolant
D. Windscreen washer fluid
E. Brake fluid
F. Battery
G. Power steering fluid

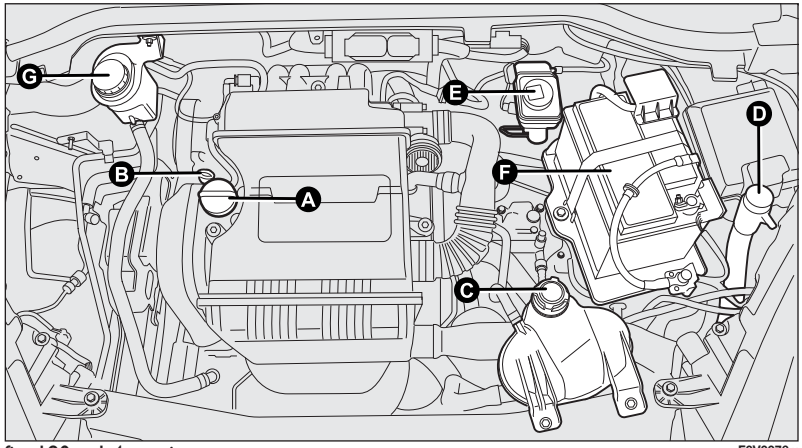

fig. 180 – 1.4 versions F0V0076m

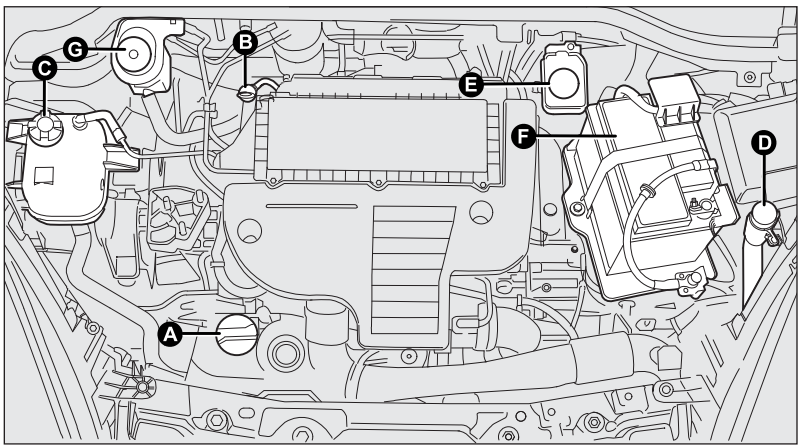

fig. 181 – 1.3 Multijet versions without DPF F0V0187m

WARNING

Never smoke while working in the engine compartment: flammable gases and vapours may be present. Fire hazard.

When topping up, be careful not to confuse the various types of fluids: they are all mutually incompatible and may severely damage your vehicle.

A. Engine oil filler
B. Engine oil dipstick
C. Engine coolant
D. Windscreen washer fluid
E. Brake fluid
F. Battery
G. Power steering fluid

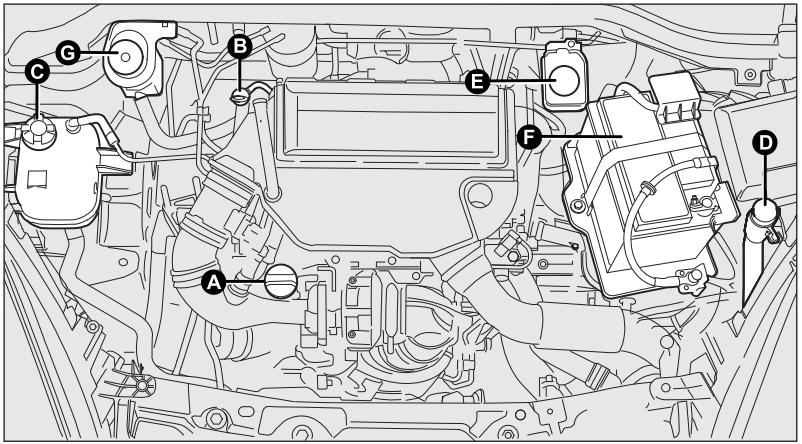

fig. 182 – 1.3 Multijet version with DPF F0V0189m

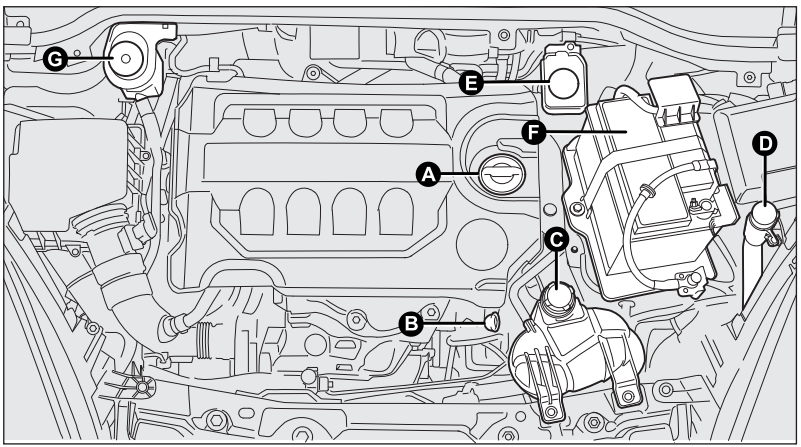

fig. 183 – 1.6 Multijet version F0V0190m

A. Engine oil filler
B. Engine oil dipstick
C. Engine coolant
D. Windscreen washer fluid
E. Brake fluid
F. Battery
G. Power steering fluid

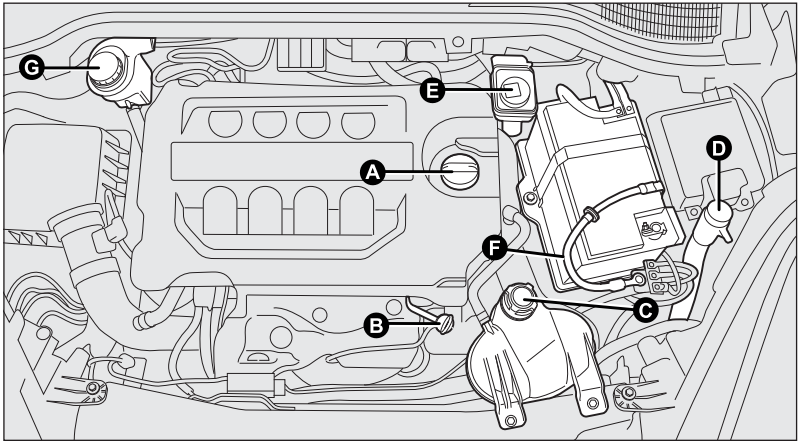

fig. 184 – 2.0 Multijet versions

ENGINE OIL fig. 180-181-182-183-184

Check the oil level a few minutes after stopping the engine (about 5 minutes) with the vehicle parked on level ground.

The oil level should be between the MIN and MAX marks on the dipstick B.

The gap between the MIN and MAX marks corresponds to about one litre of oil.

If the oil level is near or under the MIN line, add oil through the filler A until it reaches the MAX line.

The oil level should never exceed the MAX line.

Engine oil consumption

The maximum engine oil consumption is usually 400 grams every 1,000 km.

The engine needs to run in when the vehicle is new, and therefore the engine oil consumption can only be considered stabilised after the first 5,000 – 6,000 km.

IMPORTANT Oil consumption depends on driving style and conditions of use of the vehicle.

IMPORTANT After adding or changing the oil, let the engine turn over for a few seconds and wait a few minutes after turning it off before you check the level.

WARNING

Be very careful working in the engine compartment when the engine is hot: you may get burned. Remember that the fan may start up if the engine is hot: this could injure you. Make sure that scarves, ties and other items of loose-fitting clothing do not get caught up in moving components.

Do not add oil with different characteristics from those of the existing engine oil.

The used engine oil and the replaced oil filter contain substances that are harmful to the environment. It is advisable to have oil and filters changed by a Fiat Dealership, where they will be disposed of properly and in accordance with the law.

ENGINE COOLANT fig. 180-181-182-183-184

The coolant level should be checked when the engine is cold and should be between the MIN and MAX lines on the reservoir. If the level is low, slowly pour into the reservoir filler neck **C** a mixture of 50% distilled water and 50% PARAFLU^{UP} (made by **PETRONAS LUBRICANTS**) until the level approaches MAX.

The mixture of 50% PARAFLU^{UP} and 50% distilled water protects against freezing down to temperatures of –35°C. For particularly harsh climate conditions, we recommended using a mixture of 60% PARAFLU^{UP} and 40% distilled water.

PARAFLU^{UP} anti-freeze is used in the engine cooling system. Use the same fluid as in the cooling system when topping up. PARAFLU^{UP} may not be mixed with any other type of fluid. If this happens, do not start the engine; contact a Fiat Dealership.

WARNING

The cooling system is pressurised. If the cap needs replacing, do so with another original or the effectiveness of the system may be compromised. Do not remove the cap from the reservoir when the engine is hot: you may get burned.

WINDSCREEN/REAR WINDOW WASHER FLUID fig. 180-181-182-183-184

To add fluid, remove cap D by manoeuvring the special tab.

Pour in a mixture of water and TUTELA PROFESSIONAL SC 35 liquid, in the following concentrations:

30% TUTELA PROFESSIONAL SC 35 and 70% water in summer.

50% TUTELA PROFESSIONAL SC 35 and 50% water in winter.

At temperatures below –20°C, use undiluted TUTELA PROFESSIONAL SC 35 fluid.

Check level through the reservoir.

Close cap D by pressing on the centre section.

WARNING

Do not travel if the windscreen washer reservoir is empty: using the windscreen washer is essential for improving visibility.

Some commercial windscreen washer additives are flammable. The engine compartment contains hot parts which could cause a fire if they come into contact with these additives.

BRAKE FULID fig. 180-181-182-183-184

Undo cap E and check that the liquid in the reservoir is at the maximum level.

Fluid level in the reservoir must not exceed the MAX mark.

If you do need to top up, use the brake fluid shown in the "Fluids and lubricants" table (see "Technical Specifications").

NB Carefully clean the reservoir cap E and surrounding surfaces.

When opening the cap, make sure that no dirt gets into the reservoir.

Always use a funnel with a built-in filter with a mesh of 0.12 mm or less for topping up.

IMPORTANT Brake fluid absorbs moisture. For this reason, if the vehicle is mainly used in areas with a high degree of atmospheric humidity, the fluid should be replaced at more frequent intervals than specified in the "Service schedule".

Prevent brake fluid, which is highly corrosive, from coming into contact with painted parts. Should this occur, immediately wash with water.

WARNING

Brake fluid is poisonous and highly corrosive. In the event of accidental contact, wash the parts immediately with water and mild soap, then rinse with plenty of water. In case of swallowing, immediately call a doctor.

WARNING

The symbol ◎ on the container indicates a synthetic brake fluid, which is different from a mineral fluid. Using a mineral-type fluid will damage the special rubber seals of the braking system beyond repair.

POWER STEERING FLUID
fig. 180-181-182-183-184

Check that oil level with the vehicle on flat ground and engine cold is included between the MIN and MAX references on the reservoir body.

The level may go over the MAX line when the oil is hot.

If topping up is required, make sure the oil you use has the same specifications as that already in the system.

WARNING

Because it is flammable, do not allow the power steering fluid to come into contact with hot parts of the engine.

Power steering fluid consumption is very low. If the fluid needs topping up a short time after the last top-up, have the system checked by a Fiat Dealership to ensure there are no leaks.

Do not push the power steering all the way for longer than eight seconds with the engine running because it will cause noise and risk damaging the system.

AIR FILTER/POLLEN FILTER

Have the air filter or the pollen filter replaced by a Fiat Dealership.

DIESEL FILTER

CONDENSATION DISCHARGE (Multijet versions)

The presence of water in the supply circuit may cause severe damage to the injection system and irregular engine operation. If the warning light ⛽ comes on, go to a Fiat Dealership as soon as possible to have the system bled. Water may have entered the tank if this appears immediately after refuelling: if this happens, switch the engine off immediately and contact a Fiat Dealership.

BATTERY

The battery is of the "limited maintenance" type: under normal conditions of use, the electrolyte does not need topping up with distilled water.

It does, however, need to be checked regularly at a Fiat Dealership or by specialist personnel to make sure it is working properly.

WARNING

The battery fluid is poisonous and corrosive. Avoid contact with the skin and eyes. Keep naked flames or possible sources of sparks away from the battery: risk of explosion or fire.

WARNING

Using the battery when the fluid is too low can damage it irreparably and generate a risk of explosion.

REPLACING THE BATTERY

If required, replace the battery with an original spare part with the same specifications.

If a battery with different specifications is fitted, the service intervals given in the "Scheduled Servicing Plan" will no longer be valid.

Follow the battery manufacturer's instructions for maintenance.

Incorrect assembly of electric and electronic devices may cause severe damage to your vehicle. Go to a Fiat Dealership if you want to install accessories (anti-theft device, mobile phone, etc.): they will suggest the most suitable devices and advise you if a higher-capacity battery needs to be installed.

Batteries contain substances that can be very harmful to the environment. It is advisable to have the battery changed by a Fiat Dealership, where it will be disposed of properly and in accordance with the law.

If the vehicle must remain unused for a long time at very low temperatures, remove the battery and take it to a warm place to avoid freezing.

WARNING

If you have to perform any operation on the battery or near it, always protect your eyes with special goggles.

USEFUL ADVICE FOR EXTENDING THE LIFE OF YOUR BATTERY

To avoid draining your battery and make it last longer, follow these instructions closely:

- ❒ when you park the vehicle, ensure the doors, boot and bonnet are closed properly so that the ceiling lights do not stay on;
- ❒ turn off the ceiling lights, although the car does have an automatic system for switching off internal lights;
- ❒ do not leave devices (e.g. sound system, hazard lights, etc.) switched on for a long time when the engine is not running;
- ❒ before performing any operation on the electrical system, disconnect the negative battery cable;
- ❒ make sure battery terminals are fully tightened.

IMPORTANT A battery which is kept at a charge of less than 50% for any length of time will be damaged by sulphating leading to a reduction in cranking power.

The battery is also more prone to the risk of freezing (at temperatures as high as –10°C). If the vehicle is off the road for long periods, refer to "Vehicle inactivity" in the "Starting and driving" section.

If, after buying the vehicle, you want to install electrical accessories requiring permanent electric supply (alarm, etc.) or having high power level consumption, contact a Fiat Dealership, whose qualified personnel, in addition to suggesting the most suitable devices from the Lineacessori Fiat range, will assess the overall electrical consumption to determine whether the vehicle's electrical system is capable of withstanding the load required, or whether it should be integrated with a more powerful battery.

Since these devices continue to use electricity even when the engine is off, they gradually run down the battery.

WHEELS AND TYRES

Check the pressure of each tyre, including the spare, every two weeks and before long journeys. The pressure should be checked with the tyre rested and cold.

It is normal for the pressure to increase when the vehicle is used; for the correct tyre inflation pressure, see "Wheels" in the "Technical specifications" section.

Incorrect pressure causes abnormal tyre wear fig. 185:

A normal pressure: tread evenly worn.

B low pressure: tread particularly worn at the edges.

C high pressure: tread particularly worn in the centre.

The tyres must be replaced when the tread is less than 1.6 mm thick. In all cases, follow the laws in force in the country where you are driving.

IMPORTANT NOTES

❒ Where possible, avoid braking suddenly, wheel-spinning and crashing into kerbs, potholes or other obstacles. Long distances on uneven roads can damage the tyres;

❒ check the tyres regularly for cuts on the sides, swelling or irregular tread wear. Go to a Fiat Dealership if required.

❒ avoid overloading the car when travelling: this may cause serious damage to the wheels and tyres;

❒ if a tyre is punctured, stop the vehicle immediately and change it to avoid damage to the tyre, the rim, and the suspension and steering systems;

❒ a tyre will age even if it is not used much. Cracks in the tread and on the sidewalls are a sign of ageing. In any event, have the tyres checked by specialised personnel if they have been fitted for longer than six years. Remember to check the spare wheel very carefully;

❒ In case of replacement, always fit new tyres, avoiding

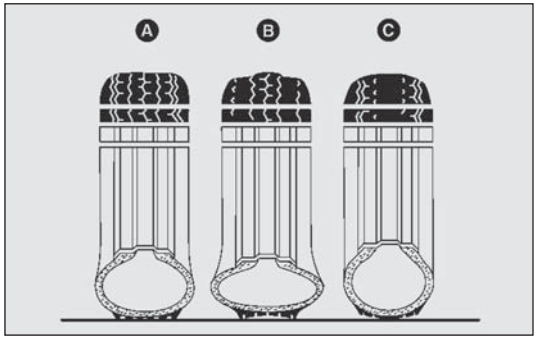

fig. 185 F0V0161m

those with an unknown origin.

- ❒ If a tyre is replaced, you should also change the inflation valve.
- ❒ to allow even wear between the front and rear tyres, it is advisable to switch them every 10-15 thousand kilometres, keeping them on the same side of the car so as not to reverse the direction of rotation.

WARNING

Remember that road hold depends on correct tyre pressures.

WARNING

If the pressure is too low, the tyre overheats and this can cause it serious damage.

WARNING

Do not switch the tyres from the right of the vehicle to the left and vice versa.

WARNING

Do not re-spray alloy wheel rims at temperatures higher than 150 °C. The mechanical characteristics of the wheels may be compromised.

RUBBER TUBES

As far as the brake system and fuel rubber hoses are concerned, stick closely to the "Scheduled Servicing Plan" in this section.

Ozone, high temperatures and a prolonged lack of fluid in the system may cause hardening and cracking of the tubes, which could result in leaks. Careful inspections are therefore necessary.

WINDSCREEN/REAR WINDOW WIPERS

(for versions/markets where provided)

BLADES

Regularly clean the rubber part using appropriate products; TUTELA PROFESSIONAL SC 35 is recommended.

Replace the blades if the rubber edge is deformed or worn. In any event, it is advisable to replace them approximately once a year.

A few simple precautions can reduce the possibility of damage to the blades:

- ❒ make sure that the rubber part is not frozen to the windscreen in sub-zero temperatures. Use an antifreeze product to release it if required;
- ❒ remove any snow from the glass: in addition to protecting the blades, this prevents the electric motor from overheating;
- ❒ do not operate the windscreen and the rear window wipers on dry glass.

WARNING

Driving with worn wiper blades is a serious hazard, because visibility is reduced in bad weather.

Replacing the windscreen wiper blades fig. 186

Proceed as follows:

❒ lift up the windscreen wiper arm;

❒ push retaining device A and, at the same time, slide the blade from the arm by pushing in the direction shown in the diagram.

Changing the rear window wiper blade fig. 187a-187b

(for versions/markets, where provided)

Versions with swing door fig. 187a

Proceed as follows:

❒ press the retaining tag A - fig. 187 and pull the blade out making it slide in the direction indicated by the arrow.

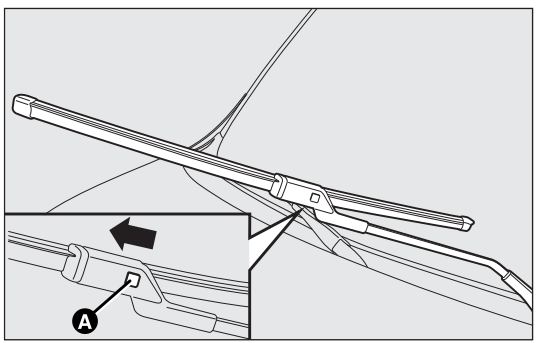

F0V0090m

fig. 186

Versions with lift-up door fig. 187b

Proceed as follows:

❒ press the retainer reversely operating as shown, then remove the blade.

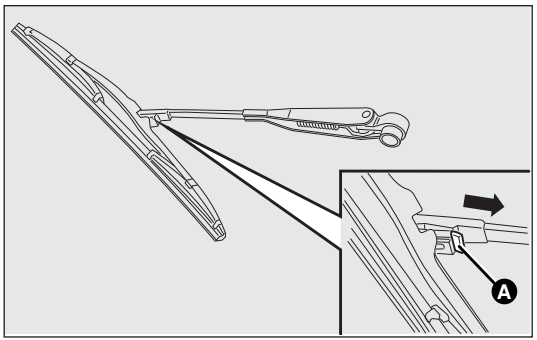

F0V0250m

fig. 187a - Versions with swing door

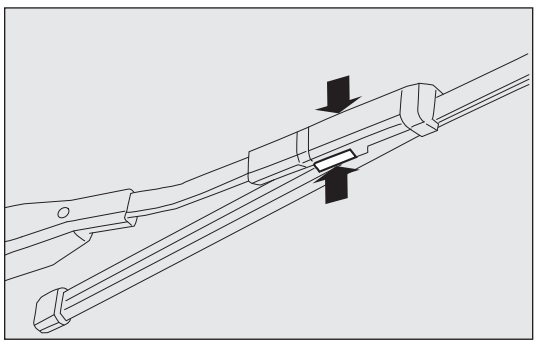

F0V0211m

fig. 187b - Versions with lift-up door

NOZZLES

If the jet is not coming out, firstly check that there is fluid in the windscreen/rear window reservoir (for versions/markets where provided) (see "Checking levels" in this section).

Then check that the nozzle holes are not clogged; use a needle to unblock them if necessary.

Front windscreen

The window washer jets are fixed. The nozzle holders are located under the bonnet (see fig. 188).

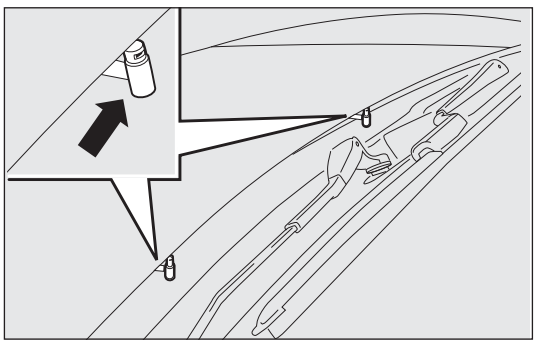

F0V0091m

fig. 188

Rear window (rear window washer)

The rear window washer jets are fixed. The nozzle holder is located above the rear window.

BODYWORK

PROTECTION FROM ATMOSPHERIC AGENTS

The main causes of corrosion are the following:

❒ atmospheric pollution;

❒ salty air and humidity (coastal areas or hot and humid climates);

❒ seasonal environmental conditions.

The abrasive action of wind-borne atmospheric dust and sand, as well as mud and gravel raised by other cars, is also not to be underestimated.

Fiat used the best manufacturing technologies on your vehicle to effectively protect the bodywork against corrosion.

These are the most important:

❒ painting products and systems which give the vehicle particular resistance to corrosion and abrasion;

❒ use of galvanised (or pre-treated) steel sheets with high resistance to corrosion;

❒ spraying the underbody, engine compartment, wheelhouse internal parts and other elements with highly protective wax-based products;

❒ spraying protective plastic materials in the most exposed areas: underdoor, inner mudguard parts, edges, etc.;

❒ using "open" boxed sections to prevent condensation and pockets of moisture from triggering rust inside.

VEHICLE BODY AND UNDERBODY WARRANTY

Your vehicle is covered by warranty against perforation due to rust of any original element of the structure or body.

For the general terms of this warranty, refer to your Warranty Booklet.

ADVICE FOR PRESERVING THE BODYWORK

Paint

Paintwork does not only serve an aesthetic purpose, but also protects the underlying sheet metal.

Touch up abrasions and scratches immediately to prevent the formation of rust. Use only original paint products for touch-ups (see "Bodywork paint identification plate" in the "Technical specifications" section).

Standard upkeep of the paintwork consists of washing the vehicle: the frequency depends on the conditions and environment where the vehicle is used.

For example, it is advisable to wash the vehicle more often in areas with high atmospheric pollution or if you are travelling on roads sprinkled with salt.

To wash the vehicle properly, proceed as follows:

❒ wash the body using a low-pressure jet of water;

❒ use a sponge to wipe a slightly soapy solution over the bodywork, frequently rinsing the sponge;

❒ rinse with plenty of water and dry with a jet of air or a chamois leather.

Observe the following recommendations for washing the vehicle in an automatic carwash:

– remove the aerial from the roof so it does not get damaged;

– the car wash should use water added to a soapy solution;

– rinse thoroughly to avoid soap marks staying on the bodywork or less visible parts.

Some car washes with old-style blades and/or in a poor state of repair can damage the paintwork, facilitating the formation of lines that give the paint a dull/misty appearance, especially on dark colours. If this happens, lightly polish the paintwork with appropriate products.

Dry the less visible parts particularly carefully, such as the door frames, bonnet and the headlight frames, where water may stagnate more easily. It is a good idea to leave the vehicle outdoors for a while after washing it to give water time to evaporate.

Do not wash the vehicle after it has been left in the sun or with the bonnet hot: this may alter the shine of the paintwork.

Exterior plastic parts should be cleaned in the same way as the rest of the vehicle. Where possible, do not park the vehicle under trees; the resinous substances released by many species give the paint a dull appearance and increase the possibility of rust.

IMPORTANT Bird droppings should be washed off immediately and thoroughly as the acid they contain is particularly aggressive.

Detergents cause water pollution. The vehicle should be washed in areas equipped for collecting and purifying the liquid used in the washing process.

Windows

Use specific detergents to clean the windows. Also use clean cloths to avoid scratching the glass or altering the transparency.

IMPORTANT Wipe the rear window gently with a cloth in the direction of the filaments to avoid damaging the heating device.

Engine compartment

At the end of each winter, thoroughly wash the engine compartment, taking care to avoid spraying the water jet directly onto the electronic control units and the relay/fuse control unit on the left side of the engine compartment (as you look from behind the wheel). Have this operation performed at a specialist garage.

IMPORTANT The washing should take place with the engine cold and the ignition key in the STOP position. After the wash, make sure that the various protective devices (e.g. rubber caps and guards) have not been removed or damaged.

Front headlights

IMPORTANT Never use aromatic substances (e.g. petrol) or ketenes (e.g. acetone) for cleaning the plastic lenses of the front headlights.

INTERIORS

Check regularly that water is not trapped under the mats (from dripping off shoes, umbrellas, etc.) which could cause the metal to rust.

WARNING

Never use flammable products, such as petroleum ether or modified petrol, to clean the inside of the vehicle. The electrostatic charges which are generated by rubbing during cleaning may cause a fire.

WARNING

Do not keep aerosol cans in the vehicle: these could explode. Aerosol cans must not be exposed to temperatures of more than 50 °C. When the vehicle is exposed to sunlight, the temperature inside can greatly exceed this value.

SEATS AND FABRIC PARTS

Remove dust with a soft brush or a vacuum cleaner. It is advisable to use a damp brush on velvet upholstery.

Rub the seats with a sponge and a solution of water and mild soap.

PLASTIC PARTS

It is advisable to clean interior plastic parts with a damp cloth and a solution of water and non-abrasive mild soap. To remove grease and tough stains, use products designed specifically for cleaning plastics. These have no solvents and have been designed so that they do not alter the appearance and colour of the components.

IMPORTANT Never use spirits or petroleum to clean the instrument panel glass.

LEATHER UPHOLSTERED STEERING WHEEL/GEAR KNOB/HANDBRAKE LEVER

(for versions/market, where provided)

These components must be cleaned with mild soap and water only. Never use spirits or alcohol-based products.

Read the product label carefully before using specific products for cleaning the interiors: make sure the product does not contain spirits or alcohol-based substances.

If, when cleaning the windscreen with special products, window cleaner accidentally drips onto the leather of the steering wheel/gear lever knob/hand brake, wipe away immediately and then wash the affected area with mild soap and water.

IMPORTANT Be careful when installing a steering wheel locking device not to damage the leather upholstery.

page intentionally left blank

IDENTIFICATION DATA

We recommend taking note of the identification codes. The following identification codes are printed and shown on the plates:

❒ Vehicle identification number (VIN) plate.

❒ Chassis marking.

❒ Bodywork paint identification plate.

❒ Engine marking.

VEHICLE IDENTIFICATION NUMBER (VIN) PLATE fig. 189

This plate is fitted to the engine compartment air intake chamber and contains the following information:

B Type-approval number

C Vehicle type identification code.

D Chassis number.

E Maximum authorised weight of vehicle fully laden.

F Maximum authorised weight of vehicle fully laden plus trailer.

G Maximum authorised weight on front axle.

H Maximum authorised weight on rear axle.

I Engine type.

L Bodywork version code.

M Number for spare parts.

N Correct smoke opacity index.

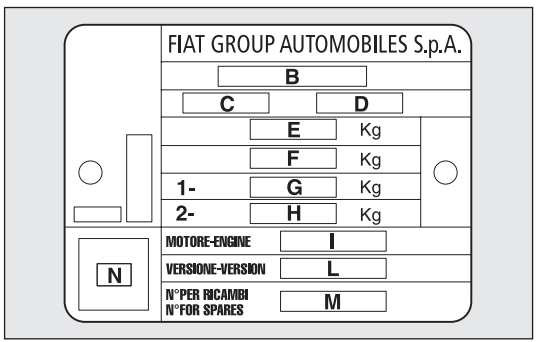

fig. 189

BODYWORK PAINT IDENTIFICATION PLATE fig. 190

This plate is fitted inside the bonnet and contains the following information:

A Paint manufacturer.

B Colour name.

C Fiat colour code.

D Re-spray and touch-up colour code.

CHASSIS MARKING fig. 191-192

These are located respectively:

– on the passenger compartment floor panel, near the right front seat; open flap A-fig. 191 to access

– on the lower part of the windscreen B-fig. 192

The marking includes:

❒ vehicle model;

❒ chassis number.

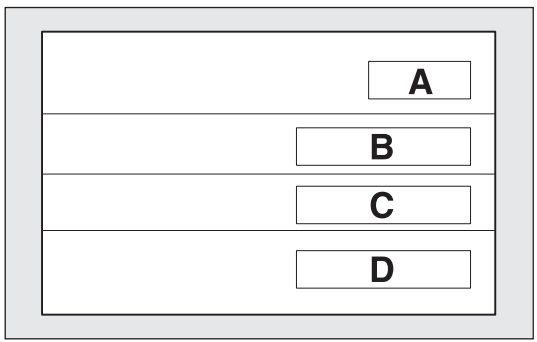

F0V0118m

fig. 190

ENGINE MARKING

This is printed onto the cylinder block and shows the type and production serial number.

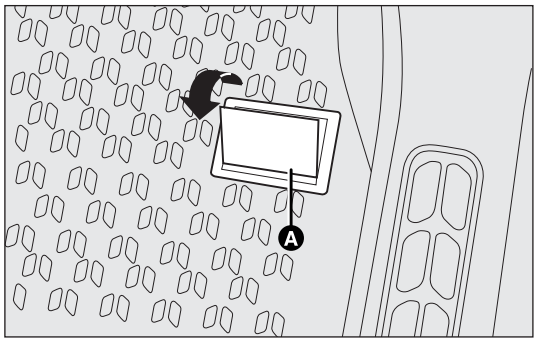

F0V0116m

fig. 191

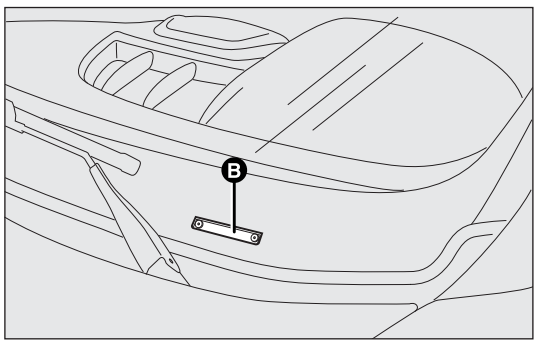

F0V0117m

fig. 192

ENGINE CODES – BODYWORK VERSIONS

	Engine code
1.4	843A1000
1.3 Multijet	199A3000 (within DPF) 263A2000 (with DPF)
1.6 Multijet	198A3000 (105 HP) 263A3000 (100 HP)
2.0 Multijet	263A1000

The following body version code and key are an example that may be applied to all body version codes:

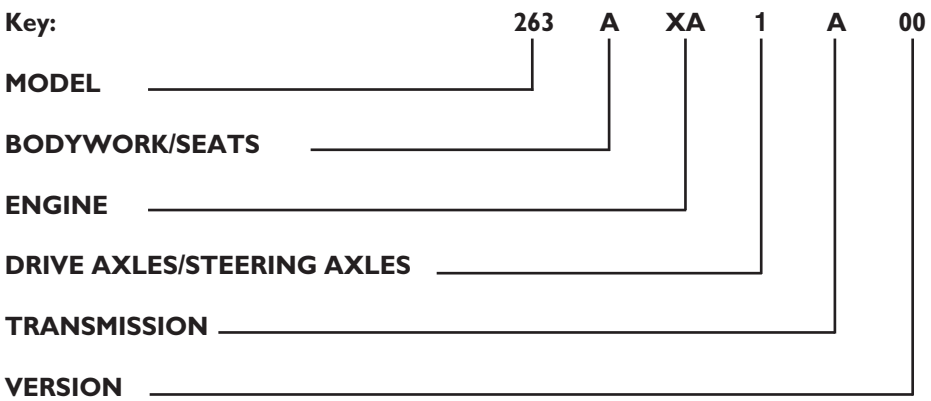

BODYWORK/SEATS

A M1 PANORAMA – 5/7 seats
Z N1 VAN – 2 seats
W N1 VAN – 2 seats extra capacity/COMBI 5 seats
Y N1 LOW LEVEL CHASSIS – 2 seats

ENGINES

XA 1.4 95 HP Euro 4/Euro 5
XB 1.3 Multijet 90 HP Euro 4 without DPF
XC 1.3 Multijet 90 HP Euro 4 with DPF – Euro 5
XD 1.6 Multijet 105 HP Euro 4 – Euro 4 with DPF – Euro 5
XE 1.6 Multijet 100 HP Euro 4 – Euro 4 with DPF – Euro 5
XF 2.0 Multijet 135 HP Euro 5

DRIVE AXLES/STEERING AXLES

1

TRANSMISSION

A Manual gearbox (5 gears)
B Manual gearbox (6 gears)
1 MTA

ENGINE

GENERAL INFORMATION		1.4	1.3 Multijet without DPF	1.3 Multijet with DPF	1.6 Multijet	2.0 Multijet
Engine code		843A1000	199A3000	263A2000	198A3000/ 263A3000	263A1000
Cycle		Otto	Diesel	Diesel	Diesel	Diesel
Number and layout of cylinders		4 in line	4 in line	4 in line	4 in line	4 in line
Piston bore and stroke	mm	72x84	69.6x82	69.6x82	79.5x80.5	83x90.5
Total capacity	cc	1368	1248	1248	1598	1956
Compression ratio		11:1	17.6:1	16.8:1	16.5:1	16.5:1
Max. power (EEC)	kW HP	70 95	66 90	66 90	77/74 105/100	99 135
corresponding speed	rpm	6000	4000	4000	4000	3500
Max. torque (EEC)	Nm kgm	127 12.95	200 20.4	200 20.4	290 29.6	320 32.6
corresponding speed	rpm	4500	1750	1500	1500	1500
Spark plugs		NGK DCPR7E-N	–	–	–	–
Fuel		Petrol 95 RON	Diesel for motor vehicles (EN 590 specification)	Diesel for motor vehicles (EN 590 specification)	Diesel for motor vehicles (EN 590 specification)	Diesel for motor vehicles (EN 590 specification)

FUEL SUPPLY

	1.4	1.3 Multijet	1.6 Multijet	2.0 Multijet
Fuel supply	Sequential, phased, Multipoint electronic injection, returnless system	Common Rail Multijet direct injection electronically controlled with turbo and intercooler	Common Rail Multijet direct injection electronically controlled with turbo and intercooler	Common Rail Multijet direct injection electronically controlled with turbo and intercooler

TRANSMISSION

	1.4 - 1.3 Multijet – 1.6 Multijet – 2.0 Multijet
Gearbox	Five or six gears (according to version) + reverse
Clutch	Self-adjusting with no free travel pedal
Drive	Front

Modifications or repairs to the fuel supply system that are not carried out properly or do not take the system's technical specifications into account can cause malfunctions leading to the risk of fire.

BRAKES

		1.4 – 1.3 Multijet – 1.6 Multijet – 2.0 Multijet
Service brakes:	front	self-ventilated discs
	rear	drum
Parking brake		controlled by hand lever, acting on rear brakes

IMPORTANT Water, ice and salt on the roads may deposit on the brake discs, reducing braking efficiency the first time the brakes are applied.

SUSPENSION

	1.4 – 1.3 Multijet – 1.6 Multijet – 2.0 Multijet
Front	Independent McPherson type
Rear	Multi-link independent, coil springs, telescopic shock absorbers and anti-roll bar (according to version)

STEERING

	1.4 – 1.3 Multijet – 1.6 Multijet – 2.0 Multijet
Type	Rack and pinion with hydraulic power steering
Turning circle (kerb to kerb)	11.2 (*)/12.5 (❑)

(*) Short wheelbase (❑) Long wheelbase

WHEELS

RIMS AND TYRES

Pressed steel or alloy wheels. Tubeless radial carcass tyres. All approved tyres are listed in the Log Book.

IMPORTANT In the event of discrepancies between the information provided in this Owner Handbook and the Log Book, the latter takes precedence.

To ensure driving safety, ensure that tyres of the same make and type are fitted on all wheels.

IMPORTANT Do not use inner tubes with tubeless tyres.

SPARE WHEEL

Pressed steel wheel.
Tubeless tyre, same as standard tyre.

WHEEL GEOMETRY

Total front toe in: – 1 ± 1 mm
The values refer to the vehicle in running order.

CORRECT READING OF THE TYRE fig. 193

Example: 185/65 R 15 88H

185 = Nominal width (S, distance in mm between sidewalls).

65 = Height/width ratio (H/S) as a percentage.

R = Radial tyre.

15 = Wheel diameter in inches (Ø).

88 = Load index.

H = Maximum speed index.

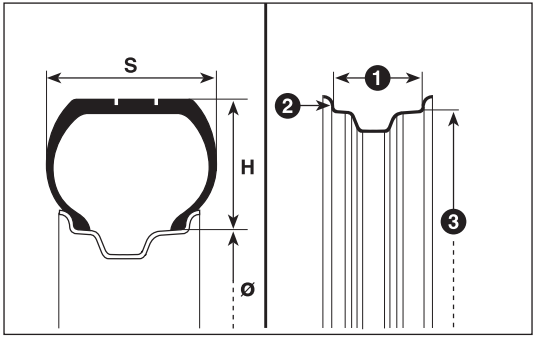

fig. 193

Maximum speed index

Q = up to 160 km/h.
R = up to 170 km/h.
S = up to 180 km/h.
T = up to 190 km/h.
U = up to 200 km/h.
H = up to 210 km/h.
V = up to 240 km/h.

Maximum speed index for snow tyres

QM + S = up to 160 km/h.
TM + S = up to 190 km/h.
HM + S = up to 210 km/h.

Load index

70 = 335 kg	**81** = 462 kg
71 = 345 kg	**82** = 475 kg
72 = 355 kg	**83** = 487 kg
73 = 365 kg	**84** = 500 kg
74 = 375 kg	**85** = 515 kg
75 = 387 kg	**86** = 530 kg
76 = 400 kg	**87** = 545 kg
77 = 412 kg	**88** = 560 kg
78 = 425 kg	**89** = 580 kg
79 = 437 kg	**90** = 600 kg
80 = 450 kg	**91** = 615 kg

RIM PROTECTOR TYRES fig. 193a

WARNING

If the car has integral cups fixed (by springs) to the sheet rim and it has after-sale tyres "Rim Protector" (fig. 193a) are used, DO NOT fit wheel cups. The use of unsuitable tyres and wheel cups could cause a sudden pressure loss of the tyre.

CORRECT READING OF THE WHEEL

Example: 6J x 15 ET43

6	=	wheel width in inches 1.
J	=	rim drop centre outline (side projection where the tyre bead rests) 2.
15	=	fitting diameter in inches (corresponds to diameter of the tyre to be fitted) 3 = Ø.
ET43:	=	wheel camber (distance between the disc/wheel support plane and the wheel centre line).

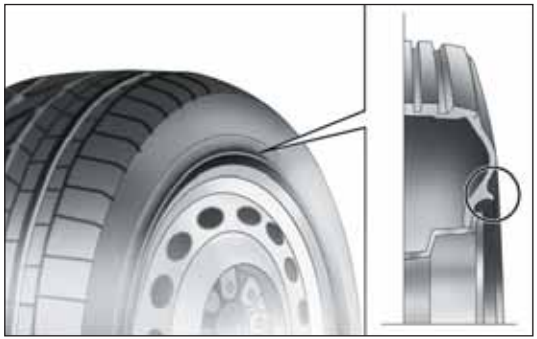

fig. 193a

Versions		Wheels	Tyres		SPARE WHEEL (for versions/markets, where provided)	
			Standard	Snow	Wheel	Tyre
1.4	**T.T.**	6Jx16 ET36,5	195/60 R16 C 99T	195/60 R16 C 99Q (M+S)	6Jx16 ET36,5	195/60 R16 C 99T
1.3 Multijet	**Cargo**	6Jx15 ET39 Light	185/65 R15 92T	185/65 R15 92Q (M+S)	6JX15 ET39 Light	185/65 R15 92T
		6Jx15 ET39 Heavy	195/65 R15 95T (*)	195/65 R15 95Q (M+S)	6JX15 ET39 Heavy	195/65 R15 95T
		6JX16 ET36,5	195/60 R16 C 99T (*)	195/60 R16 C 99Q (M+S)	6JX16 ET36,5	195/60 R16 C 99T
	Cargo Maxi	6JX16 ET36,5	195/60 R16 C 99T	195/60 R16 C 99Q (M+S)	6JX16 ET36,5	195/60 R16 C 99T
	5 Seater (M1)	6JX15 ET39 Light	185/65 R15 88T	185/65 R15 88Q (M+S)	6JX15 ET39 Light	185/65 R15 88T
		6Jx15 ET39 Heavy	195/65 R15 95T (*)	195/65 R15 95Q (M+S)	6JX15 ET39 Heavy	195/65 R15 95T
		6JX16 ET36,5	195/60 R16 C 99T (*)	195/60 R16 C 99Q (M+S)	6JX16 ET36,5	195/60 R16 C 99T
	7 Seater (M1)	6JX16 ET36,5	195/60 R16 C 99T	195/60 R16 C 99Q (M+S)	6JX16 ET36,5	195/60 R16 C 99T
	Combi (N1)	6JX15 ET39 Heavy	195/65 R15 95T	195/65 R15 95Q (M+S)	6JX15 ET39 Heavy	195/65 R15 95T
		6JX16 ET36,5	195/60 R16 C 99T (*)	195/60 R16 C 99Q (M+S)	6JX16 ET36,5	195/60 R16 C 99T
1.6 Multijet	**Cargo**	6JX15 ET39 Light	185/65 R15 92T	185/65 R15 92Q (M+S)	6JX15 ET39 Light	185/65 R15 92T
		6Jx15 ET39 Heavy	195/65 R15 95T (*)	195/65 R15 95Q (M+S)	6JX15 ET39 Heavy	195/65 R15 95T
		6JX16 ET36,5	195/60 R16 C 99T (*)	195/60 R16 C 99Q (M+S)	6JX16 ET36,5	195/60 R16 C 99T
	Cargo Maxi	6JX16 ET36,5	195/60 R16 C 99T	195/60 R16 C 99Q (M+S)	6JX16 ET36,5	195/60 R16 C 99T
	5 Seater (M1)	6JX15 ET39 Light	185/65 R15 88T	185/65 R15 88Q (M+S)	6Jx15 ET39 Light	185/65 R15 88T
		6Jx15 ET39 Heavy	195/65 R15 95T (*)	195/65 R15 95Q (M+S)	6JX15 ET39 Heavy	195/65 R15 95T
		6JX16 ET36,5	195/60 R16 C 99T (*)	195/60 R16 C 99Q (M+S)	6JX16 ET36,5	195/60 R16 C 99T
	7 Seater (M1)	6Jx16 ET36,5	195/60 R16 C 99T	195/60 R16 C 99Q (M+S)	6Jx16 ET36,5	195/60 R16 C 99T
	Combi (N1)	6Jx15 ET39 Heavy	195/65 R15 95T	195/65 R15 95Q (M+S)	6Jx15 ET39 Heavy	195/65 R15 95T
		6JX16 ET36,5	195/60 R16 C 99T (*)	195/60 R16 C 99Q (M+S)	6JX16 ET36,5	195/60 R16 C 99T
2.0 Multijet	**T.T.**	6Jx16 ET36,5	195/60 R16 C 99T	195/60 R16 C 99Q (M+S)	6Jx16 ET36,5	195/60 R16 C 99T

(*) Alternatively

COLD TYRE PRESSURES (bar)

Size	STANDARD TYRES				
	Medium load		Full load		SPARE WHEEL (for versions/ markets where provided)
	Front	Rear	Front	Rear	
185/65 R15 88T	2.5	2.5	2.9	2.9	
185/65 R15 92T	2.5	2.6	2.9	3	
195/65 R15 95T	2.4	2.4 Doblò (M1) 2.4 Doblò Cargo 3.0 Doblò Combi (N1)	2.6	2.6 Doblò (M1) 2.7 Doblò Cargo 3.2 Doblò Combi (N1)	
195/60 R16C 99	2.7	2.7	2.7	2.8 Doblò 5P (M1) 3.3 Doblò Cargo 3.6 Doblò 7P (M1)/ Doblò Combi (N1)/ Doblò Cargo Maxi	

Add +0.3 bar to the prescribed pressure when the tyres are warm. However, recheck that the value is correct with the tyre cold.
With snow tyres, add +0.2 bar to the pressure recommended for standard tyres.
When running at speeds higher than 160 km/h, inflate tyres at full-load pressures.

PERFORMANCE

Maximum speeds after initial period of use (km/h).

1.4	1.3 Multijet	1.6 Multijet	2.0 Multijet
161	158 (Euro 5) 156 (Euro 4)	164	179

DIMENSIONS

Dimensions are expressed in mm and refer to the vehicle fitted with standard tyres.

Height is measured with the vehicle unladen.

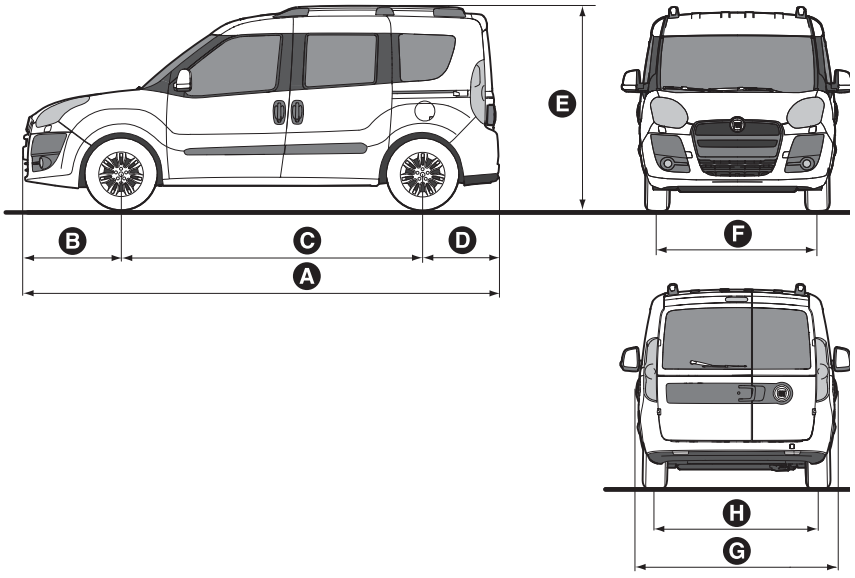

fig. 194

F0V0182m

A	B	C	D	E	F	G	H	
Versions **Short wheelbase**	4390	895	2755	740	1845/1895 (●)	1510	1832	1530

Small variations in size are possible depending on the dimensions of the wheels.

(●) With roof racks (for versions/markets where provided)

Dimensions are expressed in mm and refer to the vehicle fitted with standard tyres.

Height is measured with the vehicle unladen.

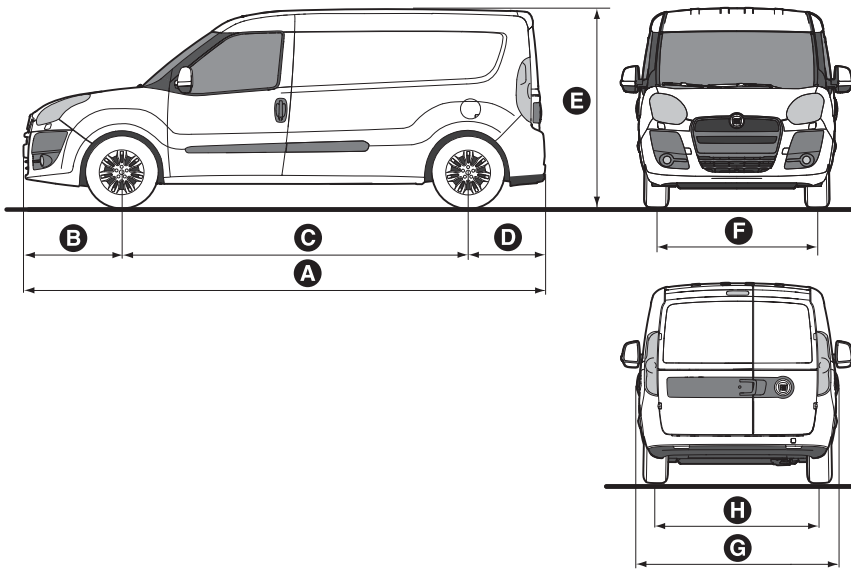

fig. 195

A	B	C	D	E	F	G	H	
Versions Long wheelbase	4740	895	3105	740	1880/1927 (●)	1510	1832	1530

Small variations in size are possible depending on the dimensions of the wheels.

(●) With roof bars (for versions/markets, where provided)

Dimensions are expressed in mm and refer to the vehicle fitted with standard tyres.

Height is measured with the vehicle unladen.

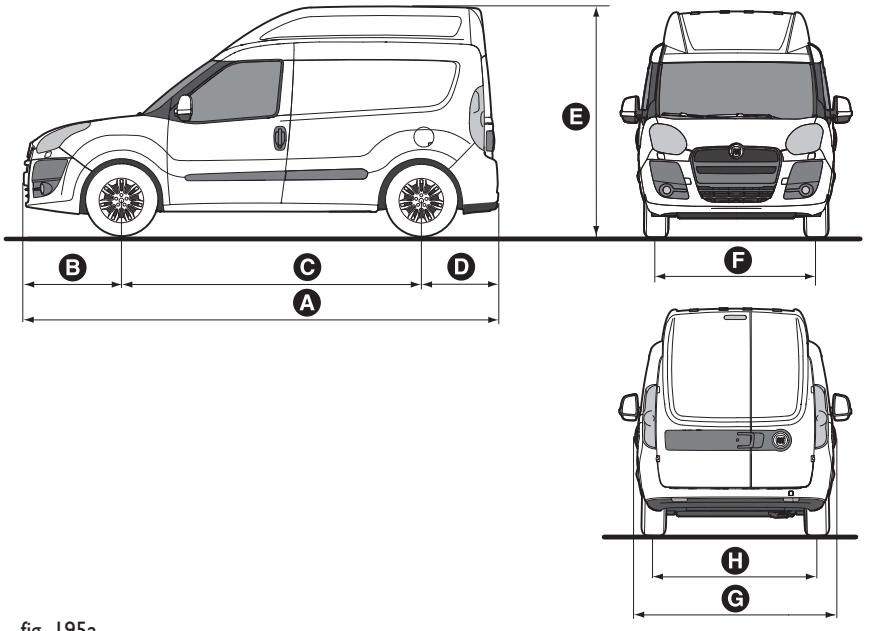

fig. 195a

	A	B	C	D	E	F	G	H
Versions High roof	4390	895	2755	740	2115 (●) / 2125 (❑)	1510	1832	1530

Small variations in size are possible depending on the dimensions of the wheels.

(●) Versions Doblò

(❑) Versions Doblò Cargo

DOBLÒ 5 SEATER M1 WEIGHTS

Weights (kg)	1.4	1.3 Multijet	1.6 Multijet	2.0 Multijet
Unladen weight (with all fluids, fuel tank filled to 90% and without optional extras)	1340	1370	1410	1450
Payload including the driver (*):	600	600	600	600
Payload excluding the driver (*):	525	525	525	525
Maximum permitted loads (**) – front axle: – rear axle: – total:	 1090 1140 1940	 1075 1075 1970	 1075 1075 2010	 1120 1140 2050
Towable loads – braked trailer: – non-braked trailer:	 1000 500	 1000 500	 1300 500	 1500 500
Maximum load on roof (***):	100	100	100	100
Maximum load on the ball joint (braked trailer):	60	60	60	60

(*) If special equipment is fitted (sunroof, tow hitch, etc.) the unladen vehicle weight increases, thus reducing the specified payload.

(**) Loads that must not be exceeded. The user is responsible for arranging goods in the luggage compartment and/or load carrying platform within the maximum permitted loads.

(***) Including the weight of any carrying systems fitted (Lineaccessori Fiat bars/box).

DOBLÒ 5 SEATER M1 HIGH-ROOF WEIGHTS

Weights (kg)	1.4	1.6 Multijet	2.0 Multijet
Unladen weight (with all fluids, fuel tank filled to 90% and without optional extras)	1360	1430	1470
Payload including the driver (*):	600	600	600
Payload excluding the driver (*):	525	525	525
Maximum permitted loads (**) – front axle: – rear axle: – total:	 1090 1140 1960	 1075 1075 2030	 1120 1140 2070
Towable loads – braked trailer: – non-braked trailer:	 1000 500	 1300 500	 1500 500
Maximum load on roof (***):	–	–	–
Maximum load on ball joint (braked trailer):	60	60	60

(*) If special equipment is fitted (sunroof, tow hitch, etc.) the unladen vehicle weight increases, thus reducing the specified payload.

(**) Loads that must not be exceeded. The user is responsible for arranging goods in the luggage compartment and/or load carrying platform within the maximum permitted loads.

(***) Including the weight of any carrying systems fitted (Lineaccessori Fiat bars/box).

DOBLÒ 7 SEATER M1 WEIGHTS

Weights (kg)	1.4	1.3 Multijet	1.6 Multijet	2.0 Multijet
Unladen weight (with all fluids, fuel tank filled to 90% and without optional extras)	1370	1400	1430	1480
Payload including the driver (*):	685	685	685	685
Payload excluding the driver (*):	610	610	610	610
Maximum permitted loads (**) – front axle: – rear axle: – total:	 1090 1170 2055	 1090 1140 2085	 1090 1140 2115	 1120 1140 2165
Towable loads – braked trailer: – non-braked trailer:	 1000 500	 1000 500	 1000 500	 1500 500
Maximum load on roof (***):	100	100	100	100
Maximum load on the ball joint (braked trailer):	60	60	60	60

(*) If special equipment is fitted (sunroof, tow hitch, etc.) the unladen vehicle weight increases, thus reducing the specified payload.

(**) Loads that must not be exceeded. The user is responsible for arranging goods in the luggage compartment and/or load carrying platform within the maximum permitted loads.

(***) Including the weight of any carrying systems fitted (Lineaccessori Fiat bars/box).

DOBLÒ COMBI N1 SHORT WHEELBASE WEIGHTS

Weights (kg)	1.4	1.3 Multijet	1.6 Multijet	2.0 Multijet
Unladen weight (with all fluids, fuel tank filled to 90% and without optional extras)	1350	1380	1420	1460
Payload including the driver (*):	710	710	710	710
Payload excluding the driver (*):	635	635	635	635
Maximum permitted loads (**) – front axle: – rear axle: – total:	 1090 1450 2060	 1090 1310 2090	 1090 1310 2130	 1120 1450 2170
Towable loads – braked trailer: – non-braked trailer:	 1000 500	 1000 500	 1300 500	 1500 500
Maximum load on roof (***):	100	100	100	100
Maximum load on the ball joint (braked trailer):	60	60	60	60

(*) If special equipment is fitted (sunroof, tow hitch, etc.) the unladen vehicle weight increases, thus reducing the specified payload.

(**) Loads that must not be exceeded. The user is responsible for arranging goods in the luggage compartment and/or load carrying platform within the maximum permitted loads.

(***) Including the weight of any carrying systems fitted (Lineaccessori Fiat bars/box).

DOBLÒ COMBI N1 SHORT WHEELBASE EXTRA CAPACITY WEIGHTS

Weights (kg)	1.4	1.3 Multijet	1.6 Multijet	2.0 Multijet
Unladen weight (with all fluids, fuel tank filled to 90% and without optional extras)	1360	1390	1430	1470
Payload including the driver (*):	800	800	800	800
Payload excluding the driver (*):	725	725	725	725
Maximum permitted loads (**) – front axle: – rear axle: – total:	 1090 1450 2160	 1090 1310 2190	 1090 1310 2230	 1120 1450 2270
Towable loads – braked trailer: – non-braked trailer:	 1000 500	 1000 500	 1300 500	 1500 500
Maximum load on roof (***):	100	100	100	100
Maximum load on the ball joint (braked trailer):	60	60	60	60

(*) If special equipment is fitted (sunroof, tow hitch, etc.) the unladen vehicle weight increases, thus reducing the specified payload.

(**) Loads that must not be exceeded. The user is responsible for arranging goods in the luggage compartment and/or load carrying platform within the maximum permitted loads.

(***) Including the weight of any carrying systems fitted (Lineaccessori Fiat bars/box).

DOBLÒ COMBI N1 LONG WHEELBASE WEIGHTS

Weights (kg)	1.4	1.3 Multijet	1.6 Multijet	2.0 Multijet
Unladen weight (with all fluids, fuel tank filled to 90% and without optional extras)	1400	1430	1470	1510
Payload including the driver (*):	800	800	800	800
Payload excluding the driver (*):	725	725	725	725
Maximum permitted loads (**) – front axle: – rear axle: – total:	 1090 1450 2200	 1090 1310 2230	 1120 1310 2270	 1120 1450 2310
Towable loads – braked trailer: – non-braked trailer:	 1000 500	 1000 500	 1300 500	 1500 500
Maximum load on roof (***):	100	100	100	100
Maximum load on the ball joint (braked trailer):	60	60	60	60

(*) If special equipment is fitted (sunroof, tow hitch, etc.) the unladen vehicle weight increases, thus reducing the specified payload.

(**) Loads that must not be exceeded. The user is responsible for arranging goods in the luggage compartment and/or load carrying platform within the maximum permitted loads.

(***) Including the weight of any carrying systems fitted (Lineaccessori Fiat bars/box).

CARGO SHORT WHEELBASE WEIGHTS

Weights (kg)	1.4	1.3 Multijet	1.6 Multijet	2.0 Multijet
Unladen weight (with all fluids, fuel tank filled to 90% and without optional extras)	1240	1270	1310	1350
Payload including the driver (*):	750	750	750	750
Payload excluding the driver (*):	675	675	675	675
Maximum permitted loads (**) – front axle: – rear axle: – total:	 1090 1140 1990	 1090 1140 2020	 1090 1140 2060	 1120 1140 2100
Towable loads – braked trailer: – non-braked trailer:	 1000 500	 1000 500	 1300 500	 1500 500
Maximum load on roof (***):	100	100	100	100
Maximum load on the ball joint (braked trailer):	60	60	60	60

(*) If special equipment is fitted (sunroof, tow hitch, etc.) the unladen vehicle weight increases, thus reducing the specified payload.

(**) Loads that must not be exceeded. The user is responsible for arranging goods in the luggage compartment and/or load carrying platform within the maximum permitted loads.

(***) Including the weight of any carrying systems fitted (Lineaccessori Fiat bars/box).

CARGO SHORT WHEELBASE EXTRA CAPACITY WEIGHTS

Weights (kg)	1.4	1.3 Multijet	1.6 Multijet	2.0 Multijet
Unladen weight (with all fluids, fuel tank filled to 90% and without optional extras)	1260	1290	1330	1370
Payload including the driver (*):	900	1000	1000	1000
Payload excluding the driver (*):	825	925	925	925
Maximum permitted loads (**) – front axle: – rear axle: – total:	 1090 1450 2160	 1090 1450 2290	 1090 1450 2330	 1120 1450 2370
Towable loads – braked trailer: – non-braked trailer:	 1000 500	 1000 500	 1300 500	 1500 500
Maximum load on roof (***):	100	100	100	100
Maximum load on the ball joint (braked trailer):	60	60	60	60

(*) If special equipment is fitted (sunroof, tow hitch, etc.) the unladen vehicle weight increases, thus reducing the specified payload.

(**) Loads that must not be exceeded. The user is responsible for arranging goods in the luggage compartment and/or load carrying platform within the maximum permitted loads.

(***) Including the weight of any carrying systems fitted (Lineaccessori Fiat bars/box).

CARGO SHORT WHEELBASE HIGH-ROOF WEIGHTS

Weights (kg)	1.4	1.6 Multijet	2.0 Multijet
Unladen weight (with all fluids, fuel tank filled to 90% and without optional extras)	1260	1330	1370
Payload including the driver (*):	750	750	750
Payload excluding the driver (*):	675	675	675
Maximum permitted loads (**) – front axle: – rear axle: – total:	 1090 1140 2010	 1090 1140 2080	 1120 1140 2120
Towable loads – braked trailer: – non-braked trailer:	 1000 500	 1300 500	 1500 500
Maximum load on roof (***):	–	–	–
Maximum load on ball joint (braked trailer):	60	60	60

(*) If special equipment is fitted (sunroof, tow hitch, etc.) the unladen vehicle weight increases, thus reducing the specified payload.

(**) Loads that must not be exceeded. The user is responsible for arranging goods in the luggage compartment and/or load carrying platform within the maximum permitted loads.

(***) Including the weight of any carrying systems fitted (Lineaccessori Fiat bars/box).

CARGO SHORT WHEELBASE HIGH-ROOF EXTRA CAPACITY WEIGHTS

Weights (kg)	1.4	1.6 Multijet	2.0 Multijet
Unladen weight (with all fluids, fuel tank filled to 90% and without optional extras)	1280	1350	1390
Payload including the driver (*):	900	1000	1000
Payload excluding the driver (*):	825	925	925
Maximum permitted loads (**) – front axle: – rear axle: – total:	 1090 1450 2180	 1090 1450 2350	 1120 1450 2390
Towable loads – braked trailer: – non-braked trailer:	 1000 500	 1300 500	 1500 500
Maximum load on roof (***):	–	–	–
Maximum load on ball joint (braked trailer):	60	60	60

(*) If special equipment is fitted (sunroof, tow hitch, etc.) the unladen vehicle weight increases, thus reducing the specified payload.

(**) Loads that must not be exceeded. The user is responsible for arranging goods in the luggage compartment and/or load carrying platform within the maximum permitted loads.

(***) Including the weight of any carrying systems fitted (Lineaccessori Fiat bars/box).

CARGO LONG WHEELBASE WEIGHTS

Weights (kg)	1.4	1.3 Multijet	1.6 Multijet	2.0 Multijet
Unladen weight (with all fluids, fuel tank filled to 90% and without optional extras)	1300	1330	1370	1410
Payload including the driver (*):	900	1000	1000	1000
Payload excluding the driver (*):	825	925	925	925
Maximum permitted loads (**) – front axle: – rear axle: – total:	 1090 1450 2200	 1090 1450 2330	 1090 1450 2370	 1120 1450 2410
Towable loads – braked trailer: – non-braked trailer:	 1000 500	 1000 500	 1300 500	 1500 500
Maximum load on roof (***):	100	100	100	100
Maximum load on the ball joint (braked trailer):	60	60	60	60

(*) If special equipment is fitted (sunroof, tow hitch, etc.) the unladen vehicle weight increases, thus reducing the specified payload.

(**) Loads that must not be exceeded. The user is responsible for arranging goods in the luggage compartment and/or load carrying platform within the maximum permitted loads.

(***) Including the weight of any carrying systems fitted (Lineaccessori Fiat bars/box).

LOW-LEVEL CHASSIS SHORT WHEELBASE WEIGHTS

Weights (kg)	1.4	1.3 Multijet Euro 4	1.3 Multijet Euro 5	1.6 Multijet	2.0 Multijet
Unladen weight (with all fluids, fuel tank filled to 90% and without optional extras)	1170	1210	1210	1250	1290
Payload including the driver (*):	990	1080	1080	1080	1080
Payload excluding the driver (*):	915	1005	1005	1005	1005
Maximum permitted loads (**) – front axle: – rear axle: – total:	 1090 1450 2160	 1090 1450 2290	 1090 1450 2290	 1090 1450 2330	 1120 1450 2370
Towable loads – braked trailer: – non-braked trailer:	 1000 500	 1000 500	 1000 500	 1300 500	 1500 500
Maximum load on roof:	0	0	0	0	0
Maximum load on the ball joint (braked trailer):	60	60	60	60	60

(*) If special equipment is fitted (sunroof, tow hitch, etc.) the unladen vehicle weight increases, thus reducing the specified payload.

(**) Loads that must not be exceeded. The user is responsible for arranging goods in the luggage compartment and/or load carrying platform within the maximum permitted loads.

LOW-LEVEL CHASSIS LONG WHEELBASE WEIGHTS

Weights (kg)	1.4	1.3 Multijet Euro 4	1.3 Multijet Euro 5	1.6 Multijet	2.0 Multijet
Unladen weight (with all fluids, fuel tank filled to 90% and without optional extras)	1185	1225	1225	1265	1305
Payload including the driver (*):	1015	1105	1105	1105	1105
Payload excluding the driver (*):	940	1030	1030	1030	1030
Maximum permitted loads (**) – front axle: – rear axle: – total:	 1090 1450 2200	 1090 1450 2330	 1090 1450 2330	 1090 1450 2370	 1120 1450 2410
Towable loads – braked trailer: – non-braked trailer:	 1000 500	 1000 500	 1300 500	 1300 500	 1500 500
Maximum load on roof:	0	0	0	0	0
Maximum load on the ball joint (braked trailer):	60	60	60	60	60

(*) If special equipment is fitted (sunroof, tow hitch, etc.) the unladen vehicle weight increases, thus reducing the specified payload.

(**) Loads that must not be exceeded. The user is responsible for arranging goods in the luggage compartment and/or load carrying platform within the maximum permitted loads.

CAPACITIES

	1.4		1.3 Multijet		1.6 Multijet		2.0 Multijet		Recommended fuels Original products
	litres	kg	litres	kg	litres	kg	litres	kg	
Fuel tank: including a reserve of:	60 8-10		60 (●) 8-10		60 (●) 8-10		60 (●) 8-10		Unleaded petrol with no less than 95 RON (EN 228 Specification) (●) Diesel for motor vehicles (EN 590 Specification)
Engine cooling system – with climate control:	–	–	–	–	–	–	–	–	Mixture of 50% demineralised water and 50% **PARAFLU^{UP}** (▲)
Engine sump: Engine sump and filter:	2.35 2.7	2 2.3	3 3.2	2,5 2,7	4.5 4.9	3.6 3.9	4.5 4.9	3.6 3.9	**SELENIA K P.E . SELENIA WR P.E.**
Gearbox casing/differential:	1.76	1.5	2	1,7	2 (■)	1.7	2 (■)	1.7	**TUTELA CAR TECHNYX (■) TUTELA GEARTECH**
Hydraulic power steering	–	0,900	–	0,900	–	0,900	–	0,900	**TUTELA GI/R**
Hydraulic brake circuit with ABS:	–	0,450	–	0,450	–	0,450	–	0,450	**TUTELA TOP 4**
Windscreen/rear window washer reservoir	2,2 (*)/ 6 (▼)	–	2,2 (*)/ 6 (▼)	–	2,2 (*)/ 6 (▼)	–	2,2 (*)/ 6 (▼)	–	Mixture of water and **TUTELA PROFESSIONAL SC 35**

(▲) When the vehicle is used in particularly harsh climate conditions, we recommend using a 60-40 mixture of **PARAFLU^{UP}** and demineralised water.

(*) For versions Doblò without headlamp washers.

(▼) For versions Doblò/ Doblò Combi/ Doblò Cargo with headlamp washers.

FLUIDS AND LUBRICANTS

SPECIFICATIONS AND RECOMMENDED PRODUCTS

Use	Quality specifications of fluids and lubricants for correct vehicle operation	Lubricants and fluids original	Interval replacement
Lubricants for petrol engines	SAE 5W-40 grade fully synthetic lubricant classification **FIAT** 9.55535-S2.	**SELENIA K P.E.** Contractual Technical Reference No. F603.C07	As per the Scheduled Servicing Plan
Lubricants for diesel engines	SAE 5W-30 synthetic lubricant, classification **FIAT 9.55535- S1**	**SELENIA WR P.E.** Contractual Technical Reference No. 510.D07	As per Scheduled Servicing Plan

For diesel engines, in the event of an emergency in which the original products are not available, lubricants with at least ACEA C2 performance are acceptable; however, in this case optimum engine performance is not guaranteed and the lubricants should be replaced with recommended products as soon as possible at a Fiat Dealership.

The use of products with lower specifications than ACEA C2 could cause damage to the engine not covered by the warranty.

When the vehicle is used under particularly harsh climate conditions request from Fiat Dealership the appropriate product of the PETRONAS LUBRICANTS.

Use	Quality specifications of fluids and lubricants for correct vehicle operation	Genuine lubricants and fluids	Applications
Lubricants and greases for drive transmission system	SAE 75W-85 grade synthetic lubricant. FIAT classification **9.55530- MX3**.	**TUTELA CAR TECHNYX** Contractual Technical Reference F010.B05	Manual gearboxes and mechanical differentials
	SAE 75W-85 grade synthetic lubricant. FIAT classification **9.55550-MZ3**.	**TUTELA CAR GEARTECH** Contractual Technical Reference F704.C08	Manual gearboxes and mechanical differentials
	Molybdenum disulphide grease, for use at high temperatures. Consistency NLGI 1-2. FIAT classification **9.55580**.	**TUTELA ALL STAR** Contractual Technical Reference F702.G07	Wheel side constant velocity joints
	Grease for constant-velocity joints with low friction coefficient. Consistency NLGI 0-1. FIAT classification **9.55580**.	**TUTELA STAR 700** Contractual Technical Reference F701.C07	Differential side constant-velocity joints
	Synthetic fluid for hydraulic and electrohydraulic systems. FIAT classification **9.55550- AG3**.	**TUTELA GI/R** Contractual Technical Reference F428.H04	Hydraulic power steering
Brake fluid	Synthetic fluid, NHTSA n° 116 DOT 4, ISO 4925 SAE J-1704, CUNA NC 956- 01. FIAT classification **9.55597**.	**TUTELA TOP 4** Contractual Technical Reference F001.A93	Hydraulic brakes and hydraulic clutch controls
Radiator protection	Red protective with antifreeze action, based on inhibited monoethyl glycol with organic formula. Exceeds CUNA NC 956-16, ASTM D 3306 specifications. FIAT classification **9.555323**.	**PARAFLU^{UP} (●)** Contractual Technical Reference F101.M01	Mixture: 50% water and 50% PARAFLU^{UP} (❑)
Diesel additive	Additive for diesel antifreeze, protecting diesel engines	**TUTELA DIESEL ART** Contractual Technical Reference F601.L06	To be mixed with diesel (25 cc per 10 litres)
Windscreen and rear window washer fluid	Mixture of spirits and surfactants. Exceeds CUNA NC 956-11 specifications. FIAT classification **9.55522**.	**TUTELA PROFESSIONAL SC 35** Contractual Technical Reference F201.D02	To be used diluted or undiluted in windscreen/rear window washer/wiper systems

(●) IMPORTANT Do not use fluids with different specifications for topping up or mixing.
(❑) When the vehicle is used in particularly harsh climate conditions, we recommend using a mixture of 60% **PARAFLU^{UP}** and 40% demineralised water.

FUEL CONSUMPTION

The fuel consumption figures, in the tables below, have been determined according to the homologation tests laid down by specific European Directives.

The procedures below are followed for measuring consumption and emissions:

- **urban cycle**: cold start and driving style that replicates the speed and gear changes as per the European directive. There are a series of accelerations, decelerations, constant speeds and stops with engine idling. The top speed reached during the cycle is 50 km/h and the average speed is 19 km/h.
- **extra-urban cycle**: done after the urban cycle as per the European directive. The top speed reached during the cycle is 120 km/h and the average speed is 63 km/h.
- **combined cycle**: determined by an average of the urban cycle (37 per cent weighting) and extra-urban cycle (63 per cent weighting) consumptions.

IMPORTANT

In practice, fuel consumption may be higher than the values obtained during the approved tests. Here are some of the major factors that can lead to a difference between test and real consumption.

1) Vehicle condition: inadequate servicing, use of roof racks, trailers, heavy loading, high usage of electrical devices and the air conditioning.
2) Driving style: frequent cold starts for short journeys, poor engine warming technique, gear selection, high speeds, sudden acceleration and braking.
3) Traffic and road conditions: driving in traffic, steep hills or winding roads, road surface conditions.
4) Atmospheric conditions: intemperate weather, wind, rain, snow, high altitude.
5) Proportion of use in towns and cities, in the country and on motorways.

PRACTICAL ADVICE FOR REDUCING FUEL CONSUMPTION AND HARMFUL EMISSIONS

Vehicle condition

1. Have checks and **servicing**carried out in accordance with the "Scheduled servicing plan".
2. Check **tyre pressure** regularly, at least once every four weeks. Excessively low pressures will increase consumption because rolling resistance will be higher. In these conditions, the tyre will wear and performance will decay faster.
3. Use **snow tyres** only when the weather conditions make them absolutely necessary. They increase consumption and noise.
4. Do not travel **with a heavy load**: the weight of the vehicle (especially when driving in town) and its trim greatly affect fuel consumption and stability.
5. Remove **roof racks or ski racks** after use. These accessories reduce the vehicle's aerodynamic penetration and have a negative effect on fuel consumption.
6. It is better to use a trailer to transport particularly bulky objects.
7. Use the vehicle's air vents if possible: travelling with the windows open impairs aerodynamics.
8. Use electrical devices only for the amount of time needed. The heated rear window, auxiliary headlights, windscreen wipers and fan heater use up a considerable amount of current, causing increased fuel consumption (up to +25% in the urban cycle).
9. Air conditioning leads to higher fuel consumption (on average up to +30%). If the temperature outside is not too extreme, try and use the air vents.

Driving style

1. After **starting the engine** you should drive away immediately and slowly, avoiding high revs. Do not warm up the engine at low or high revs when the vehicle is stationary; this causes the engine to warm up more slowly, thereby increasing fuel consumption, emissions and mechanical component wear.
2. Avoid **pointless actions** such as revving up when at traffic lights or before stopping the engine. The latter action, like double-declutching, is unnecessary and causes increased fuel consumption and pollution.
3. **Gear selection**: select a high gear as soon as possible (taking into account normal engine operation and traffic conditions) without pushing the engine to high revs during the intermediate gears. Using low gears at high revs to get excellent acceleration increases fuel consumption, harmful emissions and engine wear.

4. **Vehicle speed**: Fuel consumption considerably increases as speed increases. Keep your speed moderate and as even as possible, avoiding unnecessary braking and acceleration, which cause excessive fuel consumption and increased emissions. Keeping a safe distance from the car in front helps to maintain a steady speed.

5. **Acceleration**: accelerating violently severely affects consumption and emissions. Acceleration should be gradual and should not exceed the maximum engine torque rate.

Fuel consumption according to the current European directive (litres/100 km)

VERSIONS	CONSUMPTION		
1.4 Euro 5 Start&Stop	**Urban**	**Extra-urban**	**Combined**
Cargo short wheelbase	9.2	5.7	7.0
Cargo short wheelbase extra capacity Cargo long wheelbase	9.7	5.9	7.3
5 seater N1 – 5/7 seater M1	9.3	5.9	7.2
Cargo short wheelbase, high roof Cargo short wheelbase, high roof, increased capacity	9.4	5.9	7.2
5 seats M1 High roof	9.5	6.1	7.4

1.4 Euro 4	**Urban**	**Extra-urban**	**Combined**
Cargo short wheelbase	9.8	5.7	7.2
Cargo short wheelbase extra capacity Cargo long wheelbase	10.3	5.7	7.4
5 seater N1 – 5/7 seater M1	9.7	5.9	7.3
Cargo short wheelbase. high roof	10.3	5.6	7.3
5 seats M1 High roof	9.9	6.1	7.5

VERSIONS	CONSUMPTION		
1.3 Multijet Euro 5 Start&Stop	**Urban**	**Extra-urban**	**Combined**
Cargo short wheelbase	5,9	4,2	4,8
Cargo short wheelbase extra capacity	5,9	4,2	4,8
Cargo long wheelbase	6	4,3	4,9
5 seater N1	6	4,3	4,9

1.3 Multijet Euro 4	**Urban**	**Extra-urban**	**Combined**
Cargo short wheelbase	6,4	4,5	5,2
Cargo short wheelbase extra capacity	6,4	4,5	5,2
Cargo long wheelbase	6,6	4,5	5,3
5 seater N1	6,6	4,5	5,3
Low-level chassis	6,6	4,6	5,3

1.3 Multijet Euro 4 Start&Stop con DPF	**Urban**	**Extra-urban**	**Combined**
5 and 7 seater M1	6	4,3	4,9

1.6 Multijet Euro 5 Start&Stop	**Urban**	**Extra-urban**	**Combined**
Cargo short wheelbase	6,1	4,6	5,2
Cargo short wheelbase extra capacity Cargo long wheelbase	6,2	4,6	5,2
5 seater N1 short wheelbase	6,1	4,7	5,2
5 seater N1 long wheelbase	6,3	4,8	5,4
5 and 7 seater M1	6,1	4,7	5,2
Cargo short wheelbase, high roof Cargo short wheelbase, high roof, increased capacity	6,3	5,1	5,5
5 seats M1 High roof	6,3	5,2	5,6

VERSIONS	CONSUMPTION		
1.6 Multijet Euro 4	**Urbano**	**Extraurbano**	**Combinato**
Cargo 7 Q short wheelbase	6.6	4.7	5.4
Cargo 10 Q short wheelbase/long wheelbase	6.7	4.7	5.4
Cargo short wheelbase, high roof Cargo short wheelbase, high roof, increased capacity	6.8	5.1	5.7
1.6 Multijet Euro 4 Start&Stop with DPF	**Urban**	**Extra-urban**	**Combined**
5 and 7 seater M1	6.1	4.7	5.2
5 seats M1 High roof	6.3	5.2	5.6
2.0 Multijet Euro 5 Start&Stop	**Urbano**	**Extraurbano**	**Combinato**
Cargo short wheelbase/long wheelbase	6.5	5.1	5.6
5 seater N1/5 and 7 seater M1	6.7	5.1	5.7
Cargo short wheelbase, high roof Cargo short wheelbase, high roof, increased capacity	6.7	5.2	5.8
5 seats M1 High roof	6.8	5.5	6.0

CO_2 EMISSIONS

These are measured by analysing the exhaust gases emitted under testing, and are correlated to the consumption values through the carbon balance of the emissions.
The CO_2 emission levels given in the following tables refer to combined consumption.

Emissioni di CO_2 secondo direttiva vigente (g/km)

VERSIONS **1.4 Euro 5 Start&Stop**	**Combined**
Cargo short wheelbase	163
Cargo short wheelbase extra capacity Cargo short wheelbase	168
5 seater N1 – 5/7 seater M1	166
Cargo short wheelbase, high roof Cargo short wheelbase, high roof, increased capacity	167
5 seats M1 High roof	171

VERSIONS **1.4 Euro 4**	**Combined**
Cargo short wheelbase	169
Cargo short wheelbase extra capacity Cargo short wheelbase	174
5 seater N1 – 5/7 seater M1	172
Cargo short wheelbase, high roof	173
5 seats M1 High roof	177

VERSIONS

1.3 Multijet Euro 5 Start&Stop	Combined
Cargo short wheelbase	126
Cargo short wheelbase extra capacity	126
Cargo long wheelbase	129
5 seater N1	129

1.3 Multijet Euro 4	Combined
Cargo short wheelbase	136
Cargo short wheelbase extra capacity	136
Cargo long wheelbase	139
5 seater N1	139
Low-level chassis	141

1.3 Multijet Euro 4 Start&Stop con DPF	Combined
5 and 7 seater M1	129

VERSIONS

1.6 Multijet Euro 5 Start&Stop	Combined
Cargo short wheelbase	136
Cargo short wheelbase extra capacity Cargo short wheelbase	137
5 seater N1 short wheelbase	138
5 seater N1 long wheelbase	141
5 and 7 seater M1	138
Cargo short wheelbase, high roof Cargo short wheelbase, high roof, increased capacity	146
5 seats M1 High roof	148

1.6 Multijet Euro 4	Combined
Cargo 7 Q short wheelbase	143
Cargo 10 Q short wheelbase/long wheelbase	144
Cargo short wheelbase, high roof Cargo short wheelbase, high roof, increased capacity	152

1.6 Multijet Euro 4 Start&Stop con DPF	Combined
5 and 7 seater M1	138
5 seats M1 High roof	148

2.0 Multijet Euro 5 Start&Stop	Combined
Cargo short wheelbase/long wheelbase	148
5 seater N1 / 5 and 7 seater M1	150
Cargo short wheelbase, high roof Cargo short wheelbase, high roof, increased capacity	152
5 seats M1 High roof	157

ARRANGEMENTS FOR DEALING WITH THE VEHICLE AT THE END OF ITS LIFE

Fiat has been committed for many years to safeguarding the environment through the constant improvement of its production processes and manufacturing products that are increasingly "eco-compatible".

To give customers the best possible service in terms of respecting environmental laws and in response to European Directive 2000/53/EC governing vehicles at the end of their life, Fiat is offering its customers the opportunity of handing over their vehicle* at the end of its life without incurring any additional costs.

The European Directive sets out that when the vehicle is handed over the last keeper or owner should not incur any expenses as a result of it having a zero or negative market value.

In all European Union countries, until 1st January 2007, only vehicles registered after 1st July 2002 were collected free of charge, while since 2007 collection has been free of charge irrespective of the year of registration as long as the vehicle contains its basic components (in particular, the engine and bodywork) and has no additional waste.

To hand your vehicle over at the end of its life without extra cost, go to one of our Dealerships or Fiat-authorised collection and scrapping centres.

These centres have been carefully chosen to offer high quality service for the collection, treatment and recycling of unused vehicles with respect to the environment.

You can find further information on these collection and scrapping centres either from a Fiat or Fiat Commercial Vehicle Dealership, by calling the freephone number 00800 3428 0000 or by going on the Fiat website.

* Vehicle for transporting passengers with a maximum of nine seats and a total permitted weight of 3.5 t

DECLARATION OF CONFORMITY

Directive 99/5/EC (R&TTED)

Manufacturer or
Authorized representative: Delphi Deutschland GmbH

Address: Wiehlpuhl 4
D-51766 Engelskirchen
Germany

We declare on our sole responsibility, that the following product:

Kind of equipment: **Vehicle Immobilizier**

Type-designation: **FI2-125 kHz**

is in compliance with the essential requirements of §3 of the R&TTED.

- Health and safety requirements pursuant to §3(1)a:
  Applied Standard(s) or other means of providing conformity:
  EN 60950-1: 2001

- Protection requirements concerning EMC §3(1)b:
  Applied Standard(s) or other means of providing conformity:
  EN 301 489-3 V1.4.1 (2002-08)

- Measures for the efficient use of the radio frequency spectrum §3(2)
  Applied Standard(s) or other means of providing conformity:
  EN 300 330-2 V1.3.1 (2006-04)

DELPHI
Deutschland GmbH
Body & Security Electronics
Wiehlpuhl 4 · 51766 Engelskirchen
Telefon 02261 / 971-0
Telefax 02262 / 6033

Wiehl, 2008-12-16
place and date of issue

Mike Beckett
(Managing Director C+S Europe/South America)

Delphi Deutschland GmbH
Controls & Security

Customer & Engineering Center
Albert-Einstein-Straße 5
D-51674 Wiehl
Telefon: (02261) 971-0
Telefax: (02261) 7 28 91
Internet: www.delphi.com

Material & Production Center
Wiehlpuhl 4
D-51766 Engelskirchen
Telefon: (02261) 971-0
Telefax: (02262) 6033
Internet: www.delphi.com

Sitz der Gesellschaft
Wuppertal
Registergericht AG Wuppertal,
HRB 2254

Geschäftsführung: Michael Gassen (Vorsitzender),
Peter Gajewski, Diedrich von Behr,
Bernd Wegescheide
Aufsichtsrat: Dr. Rainer Hermeling (Vorsitzender)

DECLARATION OF CONFORMITY

Directive 99/5/EC (R&TTED)

Manufacturer or
Authorized representative: Delphi Deutschland GmbH

Address: Wiehlpuhl 4
D-51766 Engelskirchen
Germany

We declare on our sole responsibility, that the following product:

Kind of equipment: **Receiver of Keyless Entry System**

Type-designation: **FI2-AM433RX**

is in compliance with the essential requirements of §3 of the R&TTED.

- Health and safety requirements pursuant to §3(1)a:
  Applied Standard(s) or other means of providing conformity:
  EN60950-1 /2001

- Protection requirements concerning EMC §3(1)b:
  Applied Standard(s) or other means of providing conformity:
  2006/28/EC

- Measures for the efficient use of the radio frequency spectrum §3(2)
  Applied Standard(s) or other means of providing conformity:
  EN 300 220-2 V2.1.1 / (2006-04)

DELPHI
Deutschland GmbH
Body & Security Electronics
Wiehlpuhl 4 · 51766 Engelskirchen
Telefon 02261 / 971-0
Telefax 02262 / 6033

_____Wiehl, 2007-05-04_____
place and date of issue

Cyrille Emelianoff
(European Businessline Director C+S)

DELPHI DEUTSCHLAND GMBH
BODY & SECURITY ELECTRONICS

Customer & Engineering Center
Albert-Einstein-Straße 5
D-51674 Wiehl
Telefon: (0 22 61) 971-0
Telefax: (0 22 61) 7 26 91

Material & Production Center
Wiehlpuhl 4
D-51766 Engelskirchen
Telefon: (0 22 61) 971-0
Telefax: (0 22 62) 60 33

Sitz der Gesellschaft
Wuppertal
Registergericht AG Wuppertal,
HRB 2254

Geschäftsführung: Manfred Diedrich (Vorsitzender), Peter Gajewski, Stefaan Vandevelde, Diedrich von Behr, Bernd Wegescheide
Aufsichtsrat: Volker Barth (Vorsitzender)

DECLARATION OF CONFORMITY

Directive 99/5/EC (R&TTED)

Manufacturer or
Authorized representative: Delphi Deutschland GmbH

Address: Wiehlpuhl 4
D-51766 Engelskirchen
Germany

We declare on our sole responsibility, that the following product:

Kind of equipment: **Transmitter of Keyless Entry System**

Type-designation: **FI2-AM433TX V1.0**

is in compliance with the essential requirements of §3 of the R&TTED.

- Health and safety requirements pursuant to §3(1)a:
  Applied Standard(s) or other means of providing conformity:
  EN60950-1 /2001

- Protection requirements concerning EMC §3(1)b:
  Applied Standard(s) or other means of providing conformity:
  EN 301 489-1 V1.6.1: 2005

- Measures for the efficient use of the radio frequency spectrum §3(2)
  Applied Standard(s) or other means of providing conformity:
  EN 300 220-2 V2.1.1 / (2006-04)

DELPHI
Deutschland GmbH
Body & Security Electronics
Wiehlpuhl 4 · 51766 Engelskirchen
Telefon 02261 / 971-0
Telefax 02262 / 6033

Wiehl, 2007-06-15
place and date of issue

Cyrille Emelianoff
(European Businessline Director C+S)

SELÈNIA®

In the heart of your engine.

Always ask your mechanic for SELÈNIA®

The engine of your car is factory filled with ***Selenia****.*
This is an engine oil range which satisfies the most advanced international specifications. Its superior technical characteristics allow ***Selenia*** *to guarantee the* ***highest performance and protection of your engine.***

The Selenia range includes a number of technologically advanced products:

SELENIA K PURE ENERGY
Synthetic lubricant designed for latest generation, low emission, petrol engines. Its specific formulation warrants the utmost protection also for high performance turbocharged engines with high thermal stress.
Its low ash content helps to maintain the total cleanliness of modern catalysts.

SELENIA WR PURE ENERGY
Fully synthetic lubricant that can meet the requirements of the latest diesel engines. Low ash content to protect the particulate filter from the residual products of combustion.
High Fuel Economy System that allows considerable fuel saving.
It reduces the danger of dirtying the turbine to ensure the protection of increasingly high performance diesel engines

SELENIA MULTIPOWER
Particularly ideal for the protection of new generation petrol engines, very effective even in the most severe weather conditions. It guarantees a reduction in fuel consumption (Energy conserving) and it is also ideal for alternative engines.

SELENIA SPORT
Fully synthetic lubricant capable of meeting the needs of high performance engines.
Studied to protect the engine also in high thermal stress conditions, it prevents deposits on the turbine to achieve the utmost performance in total safety.

The range also includes Selenia StAR Pure Energy, Selenia Racing, Selenia K, Selenia WR, Selenia 20K, Selenia 20K AR. For further information on Selenia products visit the web site www.selenia.com.

INDEX

ABS system 96
Additional brake light
– bulb replacement..... 176
Adjusting the vehicle interior lighting 20
Air bag deactivation 130
Air filter 206
Air recirculation 46-49-56
Air vents 43
Antifreeze
– checking levels and topping up..... 202
– specifications 248
Ashtray..... 75
ASR function 100
ASR system 100
ASR(system) 100
Automatic climate control system 51

Battery recharging..... 188
Battery..... 206
– jump starting 155
– maintenance 208
– recharge 188
– replacement..... 207
– tips for extending battery life 208
Body (marking) 220
Body codes..... 221
Body marking 220
Body paintwork identification plate 220
Body versions 221
Body
– body version codes 221
– cleaning, care and maintenance 214

Bonnet
– opening/closing 91-92-93
Bookrest 76
Boot 85
– expanding the boot 89
– parcel shelf (removal) 88
– removing the parcel shelf 88
– securing your load 91
Boot courtesy light 67
Boot
– emergency opening from the inside 85-86
– expanding the boot 89
– opening with remote control 6
– securing your load 91
Brake Assist (system)..... 98
Brake Assist system 98

Brake fluid
– checking levels and topping up 203
– specifications 248
Brake lights
– bulb replacement..... 176
Brakes
– brake fluid (type) 246-248
– checking levels and topping up 203
– handbrake 135
– technical specifications 225
Bulbs
– bulb types 170-171
– general information on replacement 169

Capability for Isofix child seat 125
Capacities
– technical data (quantities) 246
Carrying children 120
Carrying children safely 125
– Isofix child seat capability 125
Catalytic converter 113
Catalytic converter 113
Catalytic converter 113
Central locking 77
Changing a wheel 156
– general information and warnings 156
– tyre and wheel types 228
– tyre inflation pressure 229
Changing bulbs
– bulb types 170
– exterior 172
– general information 169
– interior 178
Checking levels 199
– brake fluid 204
– engine coolant 203
– engine oil 202
– windscreen/rearscreen/ headlamp washer fluid ... 203
Child safety device 80
Child safety..... 80
Child seats 120
– capability for Isofix child seat 125
– suitability for using child seats 124-127
Cigar lighter 58
Cleaning and maintenance
– body 214
– engine compartment 216
– fabric seats 217
– interiors 216
– leather upholstery 217
– plastic parts 217

– windows 61
Cleaning your vehicle
– engine compartment 216
– exterior 214
– interiors 216
Climate control system ... 47-51
– Air vents 43
Climate control system controls 47-51
Climate control vents 43
Clock
– adjusting 22
Clutch
– technical specifications.... 224
CO_2 emissions at exhaust .. 253
CODE Card 5
Constant speed regulator (Cruise Control) 63
Control buttons 70
Controls (buttons) 70
Cruise Control (constant speed regulator) 63
Cut-off system 70

Dashboard 3
Dead lock 8
Dead lock device 8
Defrosting-demisting
– rear windscreen 46-49-58
– windscreen and front side windows 45-48-57
Demisting/defrosting
– door mirrors 46-49-58
– rear windscreen 46-49-58
– windscreen and front side windows 45-49
Diesel filter 206
– water in the filter warning light 151
Diesel particulate filter (DPF) 114
Digital display 14
– control buttons 14
– Set-up menu 15
– standard screen 14
Dipped beam headlights
– bulb replacement..... 173
– switching on..... 59
Dipped beam headlights
– bulb replacement..... 173
– switching on..... 59
Direction indicators
– front bulb replacement... 173
– rear bulb replacement..... 175
– switching on 60
Direction indicators
– front bulb replacement... 172
– rear bulb replacement..... 175
– switching on 60
Direction indicators
– front bulb replacement... 173

– rear bulb replacement 175-176
– side bulb replacement 173
– switching on 60
Document holder clip 76
Door locking 77
Doors
– central locking 77
– child safety device 80
– load compartment unlocking device 77
– opening/closing from the inside 79-80
– remote opening/closing 6
DPF (diesel particulate filter) 114

Electrical/electronic devices 110
Emergency starting 155
– bump starting 166
– jump starting 155
Emissions of CO_2 253
End of vehicle life 255
Engine codes 221
Engine compartment
– checking levels 199
– opening/closing the bonnet 91
– washing 216
Engine coolant
– checking levels and topping up 203
– specifications 248
– temperature gauge and warning light 13
Engine coolant temperature gauge 13
– type of coolant 248
Engine coolant temperature overheating warning light .. 145
Engine coolant
– checking levels and topping up 203
– specifications 248
Engine cooling
– checking levels and topping up 203
– specifications 248
Engine immobiliser (Fiat CODE) 4
Engine marking 220
Engine oil consumption 201
Engine oil consumption 201
– consumption 202
– engine oil specifications .. 247
Engine oil
– checking levels and topping up 202
– consumption 202
– specifications 247
Engine starting 133
– emergency starting ..134-155

– ignition switch 9
– ignition switch 9
– procedure for Diesel versions 134
– procedure for petrol versions 133
– stopping the engine 135
– warming up the engine .. 134
Engine
– engine immobiliser (Fiat CODE) 4
– identification codes..... 221
– marking 220
– technical data 223
Environment protection 113-114
– diesel particulate filter (DPF) 114
Environment
– devices for reducing emissions 113-114
EOBD (system) 102
ESP (system) 98
Expanding the boot 89
Exterior lights (switching on) 59-60

Fiat CODE 4
Fix&GO automatic (quick tyre repair kit) 163
Flashing (main beam headlights) 60
Fluids and lubricants (specifications) 242-243
Fog lights
– bulb replacement..... 174
– switching on 70
Fog lights
– bulb replacement..... 174
– switching on 70
Follow me home (headlight device) 60
Front air bags 128
– deactivation 130
– driver 129
– passenger 129
Front armrest 71
Front courtesy light 65
– bulb replacement..... 178
Front light clusters
– bulb arrangement..... 172
Front seats 31
– adjustments 30-31
– armrest 71
– cleaning 216
– headrest 38
– heating 32
Fuel consumption 249
Fuel cut-off (system) 70
Fuel economy 137

Fuel flap 112
Fuel gauge 13
– fuel type 111-112
Fuel reserve 246
Fuel reserve warning light ... 150
Fuel tank (capacity) 246
Fuel tank cap 112
Fuel
– at the filling station ... 111-112
– consumption 249
– fuel cut-off (system) 70
– fuel level gauge and reserve warning light 13
– fuel tank cap 112
– opening the flap 112
– refuelling 111-112
– specifications 111-112
Fuse boxes (location) .. 182-186
Fuse list 182-183-184-185-186-187
Fuse summary table 182-183-184-185-186-187
Fuses 182-183-184-185-186-187
– Fuse location (control units) 182-186
– general information and warnings 181

Gear lever 136
Gearbox 136
– technical specifications 224
Glove compartments 71

Handbrake lever 135
Handbrake 135
Hazard warning lights
– switching on 70
Headlamp alignment (corrector) 95
Headlight alignment corrector 95
Headlight washers 62
– checking levels and topping up 203
– windscreen washer fluid specifications 248
Headlights
– bulbs (type) 170
– headlight alignment corrector 95
Headlights 95
– adjusting headlights abroad 96
– beam orientation 95
– bulb replacement 169
– bulbs (type) 170-171
– headlight alignment corrector 95

Headrest
– front 38
– rear 38
Headrests
– front 38
– rear 38
Heated rear windscreen 46-49-58
Heating and ventilation 44
Heating and ventilation system 42
Heavy use of the vehicle 198
Hill Holder (system) 99
Hill Holder system 99

Identification data 219-220
Ignition pawl 9
Ignition switch 9
– steering lock 9
In an emergency 155
Installing electrical/electronic devices 110
– Radio transmitters and mobile phones 110
Installing the tow hook 139
Instrument panel 11
Interior equipment 71
Interior fittings 71
Interior lighting
– front 65-66-69
– rear 66-67-68-69
Interiors (cleaning) 216
Isofix (child seat)
– capability for Isofix child seat 125
– suitability for using child seats 127

Jack
– use 159
– warnings 158

Keys 5
– key with remote control ... 6
– key without remote control 6
– remote control battery replacement 7
– remote door opening/ closing 5-6
– requesting additional remote control keys 8
Knowing your vehicle 3

Ladder bulkhead behind driver 37
Lights (switching on controls) 59
Load limiters 118
Long vehicle inactivity 142
Lubricant specifications 247-248
Lubricants (specifications) 247-248

Lubricants
specifications 247-248

Main beam headlights
– bulb replacement..... 174
– flashing 59
– switching on..... 59
Main beam headlights
– bulb replacement..... 174
– switching on..... 59
Manual climate control
system 47
Mirror adjustment..... 40-41
MSR system 100
MSR(system) 100
Multifunction display 19
– control buttons 19
– Set-up menu 20
– standard screen 19

Nozzles
– windscreen/rearscreen
washer 213
Number plate lights
– bulb replacement 177

On-board computer (trip) 28
On-board instruments
(panel) 12

Paintwork (maintenance) ... 214
– body colour plate 220
ParafluUP
– checking levels
and topping up 203
– specifications 248
Parking (sensors) 103
Parking sensors..... 103
Partitions 36
Pollen filter 206
Portable navigator socket 75
Power supply
(technical data) 224
Protecting the environment 113
Punctures
– changing a wheel 156
– general information 156
– quick tyre repair kit
Fix&GO automatic 163

Quick tyre repair kit
(Fix&GO automatic) 163

Radio (wiring system) .. 109-110
Radio transmitters
and mobile phones 110
Radio transmitters
and mobile phones 110
Radio wiring system 109-110
Raising the vehicle 189
– with the jack 158
Rear courtesy lights 66-67-68
– bulb replacement..... 179
Rear door locking 80-81-82
Rear door locking device 79

Rear fog light
– bulb replacement..... 175
– switching on 70
Rear fog light
– bulb replacement 175
– switching on 70
Rear fog lights 70
Rear light clusters
– bulb replacement 175
Rear seats
– cleaning 216
– headrest 38
Rear swing doors 80
– remote control 6
Rear view mirrors
– exterior 40
– interior..... 40
Rear window wiper
– activation 62
– blade replacement 212
– windscreen washer fluid specifications 248
Rearscreen washer 62
– activation 62
– checking levels and topping up 203
– nozzles 213
Regular inspections 198
Remote control 6
– additional remote controls 8
– battery replacement 7
– official approvals 256-257-258
– remote door opening/ closing..... 6
– tailgate opening 7
Replacing fuses
– fuse location (control units) 182-186
– general information and warnings 181
– list 182-183-184-185-186-187
Replacing the battery of the key with remote control 6
Rev counter 12
Rev counter 12
Reverse light
– bulb replacement 175
Reverse light
– bulb replacement 175
Rim protector (tyres) 227
Roof bar attachments 94
Roof rack/ski rack bars (capability) 94
Roof rack/ski rack bars (capability) 94
Rubber hoses 211

Safety 115
Saving fuel 137
SBR system 117
Scheduled servicing plan 192-194-196
Scrappage 255
Scrappage 255
Seat adjustment 30
Seat belt pretensioners 117
– load limiters 118
Seat belts 115
– carrying children safely .. 120
– general warnings 118
– load limiters 118
– maintenance 120
– pretensioners 117
– SBR system 117
– using the seat belts 115
Seat heating 32
Servicing and maintenance .. 199
– checking fluid levels 199-200-201
– heavy use of the vehicle ...198
– precautions and warnings 191
– regular inspections 198
– scheduled servicing plan 192-193-194-195-196-197
Setting the clock..... 22
Side air bags (side bag - window bag)..... 130-131-132
– general warnings 131
Side/taillights
– front bulb replacement... 172
– rear bulb replacement 175-176
– switching on..... 59
Sliding side doors 78
Smart washing (windscreen wipers) 61
Snow chains 141
Sockets 72-73
Spare wheel 228
– technical specifications.... 228
Spark plugs (type) 223
Speed block system 102
Speed block..... 102
Speedometer 12
Speedometer 12
Speedometer 14-19
Start&Stop (system) 104
Start&Stop system 104
Starting and driving 133
Steering lock and ignition switch 9
Steering wheel adjustment 39
Steering wheel levers 59-61
Steering wheel lock..... 9
Steering wheel
– adjustment lever 39
– turning circle 225

Steering
– steering wheel adjustment lever 39
– technical data 225
Sun visors 75
Suspensions 225
Switching courtesy lights on/off 69
Symbols 4

Tailgate
– emergency opening from the inside 85-86
– opening with remote control 6-7
Technical specifications 219
Technical specifications. 219
Third brake light 176
Top speeds 229
Topping up the engine oil ... 202
– specifications 247
Tow hook
– installation 189-190
Towing the vehicle 189
Towing trailers 139
Trailer (towing) 189-190
– installing the tow hook 189-190
Transmission
– technical data 224
Trip computer 28
Turning circle..... 225
Tyres pressure 229
Tyres
– changing a wheel 156
– Fix&GO automatic quick tyre repair kit 163
– in the event of a puncture 156
– inflation pressure 229
– reading the symbols correctly 226-227
– Rim protector 227
– snow chains 141
– snow tyres 140-228
– storing tools and space saver wheel 158-159
– tyre and wheel types 228
– winter 228

Using the gearbox 136

Vehicle data 219
Vehicle dimensions..... 230-231
Vehicle inactivity 142
Vehicle performance 229
Vehicle weights 233
VIN plates 219

Warning lights and messages 143
Washer fluid for wind-screen/rearscreen/headlamps

– checking levels and topping up 203
– specifications 248
Wheel geometry 226
Wheel rims 226
– correct reading 227
Wheels and tyres
– changing a wheel 156
– Fix&GO automatic quick tyre repair kit 163
– in the event of a puncture 156
– reading the symbols correctly 226-227
– Rim protector 227
– snow chains 141
– snow tyres 228
– snow tyres 228
– tyre and wheel types 228
– tyre inflation pressure 229
– wheel geometry 226
When parked 136
When parked 136
Windows
– cleaning 61-216
Windows
– electric 83-84
– manual 84
Windows
– cleaning 61-216
– windscreen washer fluid (specifications) 248
Windscreen washer
– activation 61
– checking levels and topping up 203
– nozzles 213
– “smart washing” function 61
– windscreen washer fluid specifications 248
Windscreen wiper blades
– replacement..... 211
Windscreen wiper
– activation 62
– blade replacement ... 211-212
– nozzles 213
– windscreen washer fluid specifications 248
Winter
– snow chains 141
– snow tyres 228

Fiat Group Automobiles S. p. A. – Customer Services – Technical Services – Service Engineering
Largo Senatore G. Agnelli, 5 – 10040 Volvera – Torino (Italia)
Print no. 603.81.432 – 05/2010 – 2 Edition

ENGLISH

The data contained in this publication is intended merely as a guide. FIAT reserves the right to modify the models and versions described in this booklet at any time for technical and commercial reasons.
If you have any further questions please consult your FIAT dealer.
Printed in recycled paper without chlorine.